JVC

SERVICE MANUAL

CASSETTE RECEIVER

KS-FX832R

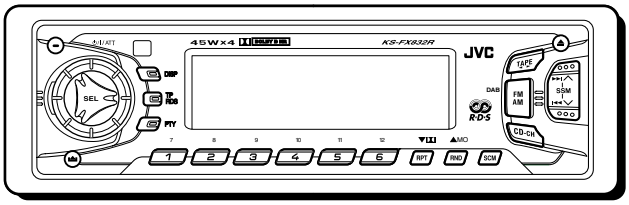

Area Suffix

E ----- Continental Europe

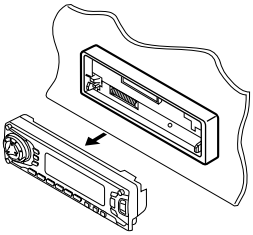

Contents

Safety precaution ---------- 1- 2
Disassembly method ---------- 1- 3
Adjustment method ---------- 1-11
Description of major ICs ---------- 1-14~23

COPYRIGHT © 2002 VICTOR COMPANY OF JAPAN, LTD.

No.49692
Feb. 2002

Safety precaution

⚠ ***CAUTION*** **Burrs formed during molding may be left over on some parts of the chassis. Therefore, pay attention to such burrs in the case of preforming repair of this system.**

Disassembly method

■ Removing the front panel unit

(See Fig.1)

1. Press the release switch and remove the front panel unit in the direction of the arrow.

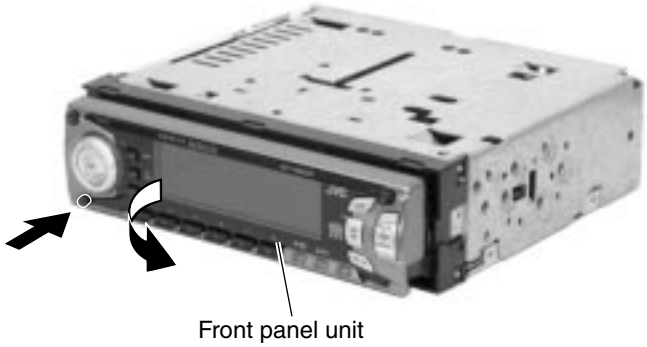

Fig.1

■ Removing the front chassis

(See Fig.2 to 3)

・ Prior to performing the following procedure, remove the front panel assembly.

1. Remove the two screws **A** attaching the front chassis.
2. Insert a screwdriver to the two joints **a** on the left side of the front chassis, two joints **b** on the right side and one joint **c** from upside, then detach the front chassis toward the front side.

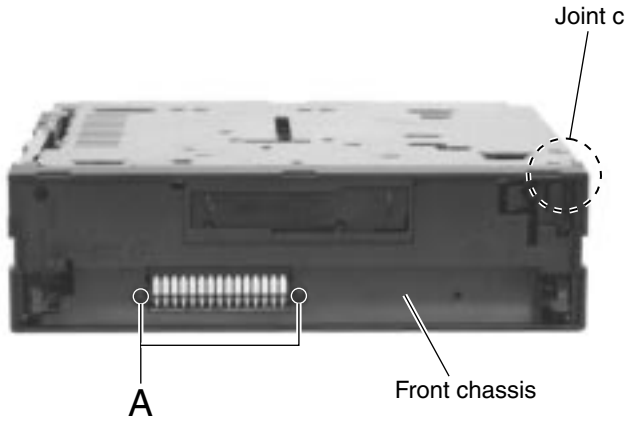

Fig.2

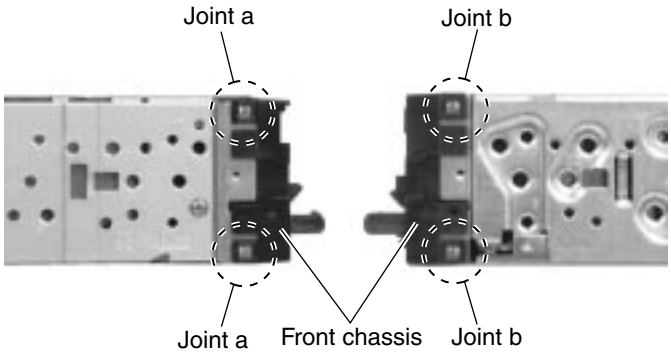

Fig. 3

■ Removing the heat sink (See Fig.4)

1. Remove the three screws **B** attaching the heat sink on the left side of the body, and remove the heat sink.

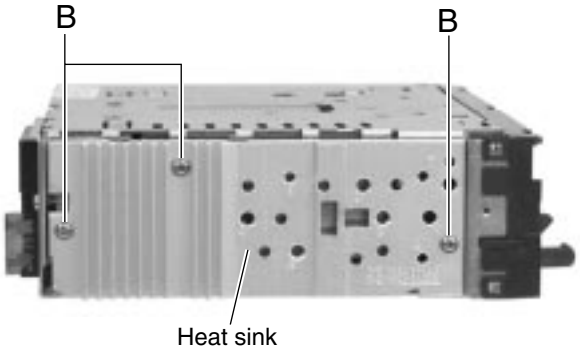

Fig. 4

■ Removing the bottom cover (See Fig.5)

・ Prior to performing the following procedure, remove the front chassis and the heat sink.

1. Turn the body upside down.

2. Insert a screwdriver to the two joints **d** and two joints **e** on both sides of the body and the joint **f** on the back of the body, then detach the bottom cover from the body.

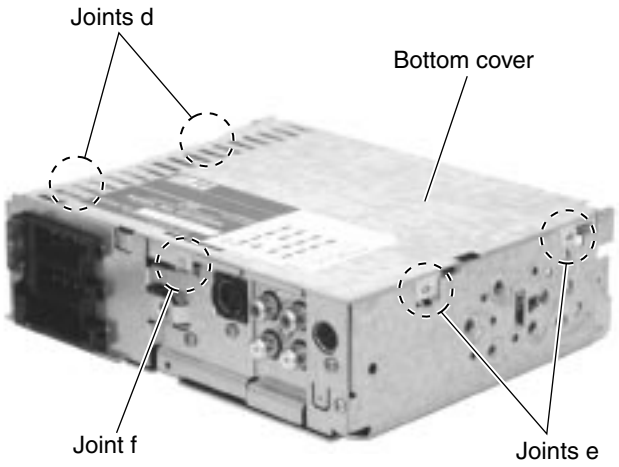

Fig. 5

■ Removing the rear panel (See Fig.6)

・ Prior to performing the following procedure, remove the front chassis, the heat sink and bottom cover.

1. Remove the five screws **C** attaching the rear panel and one screw **D** attaching the pine jack on the back of the body.

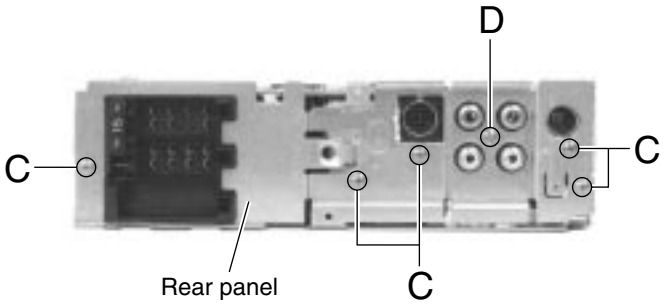

Fig. 6

■ Removing the main amplifier board assembly (See Fig.7)

・ Prior to performing the following procedure, remove the front chassis, the heat sink, bottom cover and the rear panel.

1. Remove the two screws **E** attaching the main amplifier board assembly on the top cover.

2. Disconnect connector CP401 on the main amplifier board assembly from the cassette mechanism assembly.

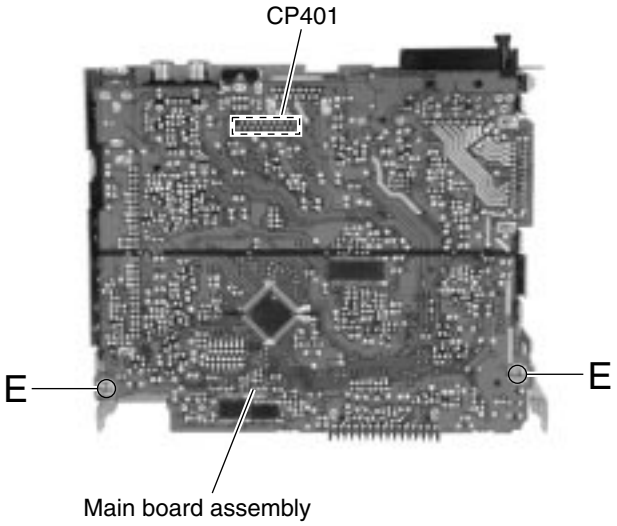

Fig. 7

■ Removing the cassette mechanism assembly (See Fig.8)

・ Prior to performing the following procedure, remove the front chassis, the heat sink, bottom cover and the main amplifier board assembly.

1. Remove the four screws **F** attaching the cassette mechanism assembly from the top cover.

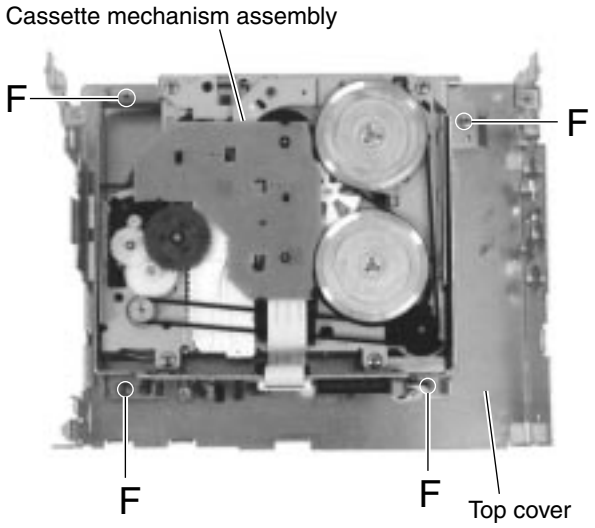

Fig. 8

■ Removing the (LCD & key) control switch board (See Fig.9 to 11)

・ Prior to performing the following procedure, remove the front panel assembly.

1. Remove the four screws **G** attaching the rear cover on the back of the front panel assembly.

2. Unjoint the nine joints **g** with the front panel and the rear cover.

3. Remove the control switch board on the back of the front panel.

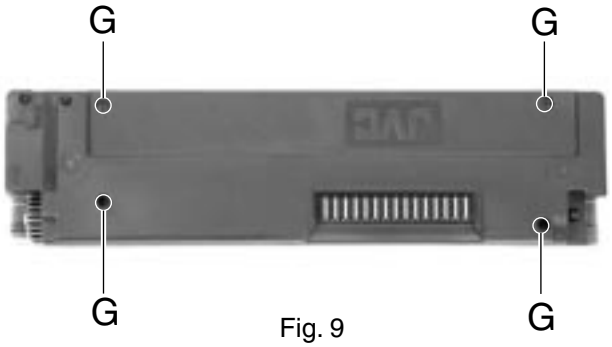

Fig. 9

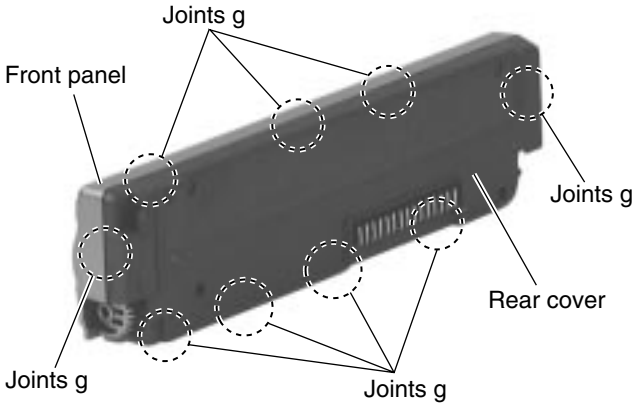

Fig. 10

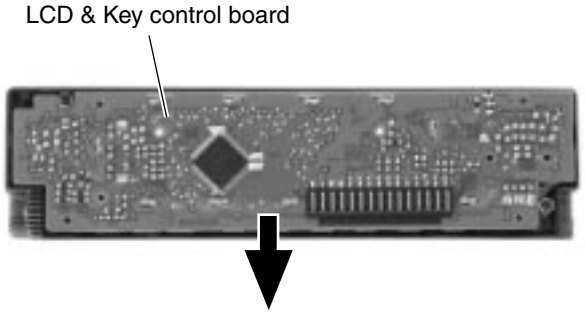

Fig. 11

<Removal of the cassette mechanism>

■ Removing the head amplifier board. (See Fig.1 and 2)

1. For the 6pin wire extending from connector CN402 on the head amplifier board, disconnect it from the head relay board.

2. Disconnect the card wire from connector CN403 on the head amplifier board.

3. Remove the screw **A** attaching the head amplifier board.

4. Move the tab **a** as shown in Fig.2 and remove the head amplifier board while moving it in the direction of the arrow.

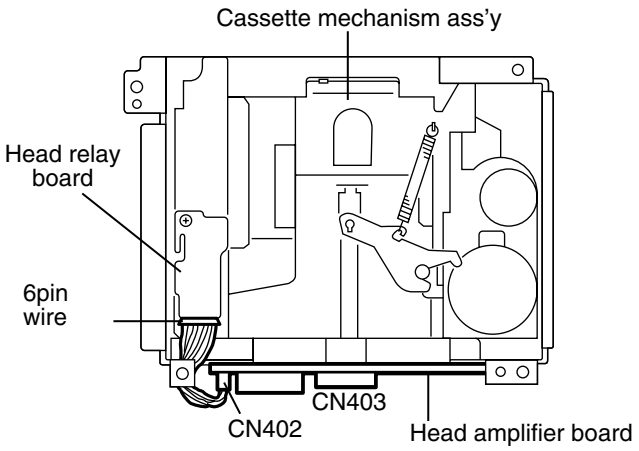

Fig.1

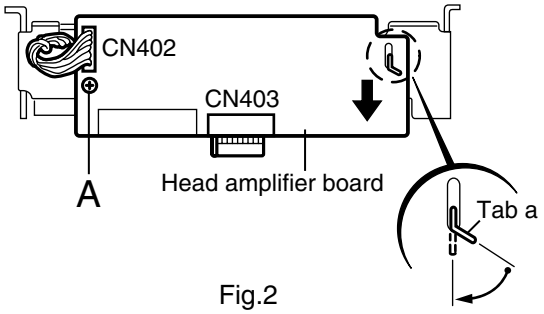

Fig.2

■ Removing the cassette mechanism assembly (See Fig.1 to 3)

1. Disconnect the 6pin wire from connector CN402 and the card wire from CN403 on the head amplifier board (Refer to Fig.1 and 2).

2. Remove the four screws **B** on the bottom of the cassette mechanism.

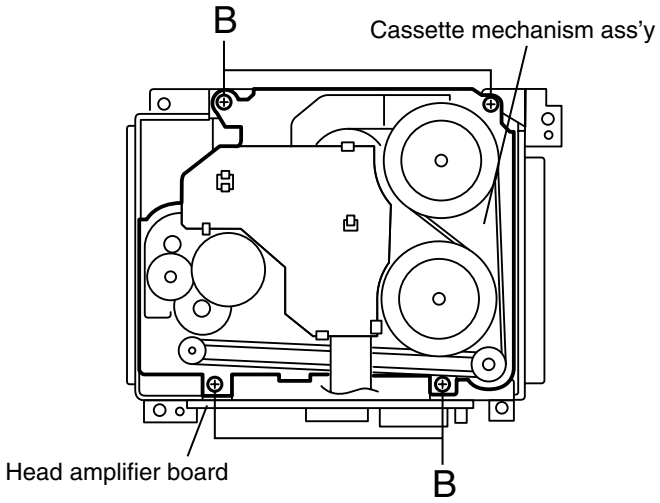

Fig.3

■ Removing the head relay board (See Fig.4)

1. Unsolder the soldering **b** on the head relay board.
2. Remove the screw **C** attaching the head relay board.
3. Remove the head relay board in the direction of the arrow while releasing the two joints **c**.

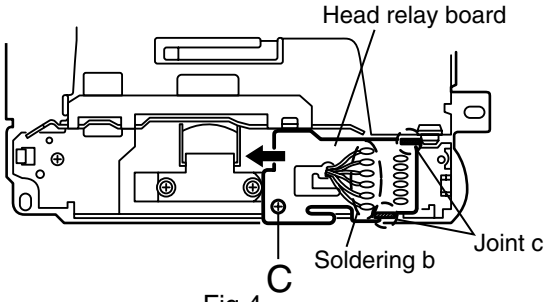

Fig.4

■ Removing the load arm (See Fig.5)

1. Remove the **E** washer attaching the load arm using a pincette or something like that and remove the spring **d**.
2. Move the part of the load arm marked ※ upwards to release it from the axis of rotation. Then rotate the load arm in the direction of the arrow to remove it from the cach.

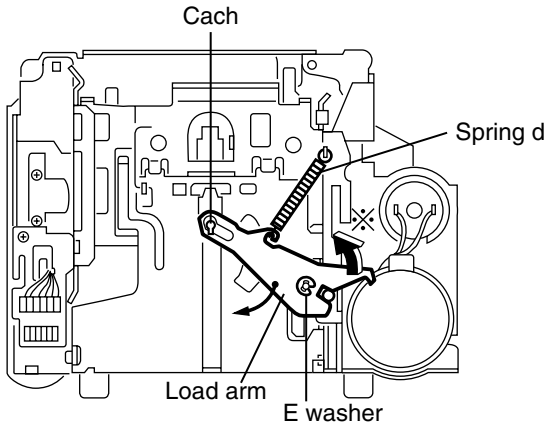

Fig.5

■ Removing the sub chassis (See Fig.6)

・Prior to performing the following procedure, remove the head relay board.

1. Remove the screw **D** attaching the sub chassis.
2. Push the tab **e** in the direction of the arrow to detach the one side of the sub chassis. Then release the sub chassis from the tab **f**.

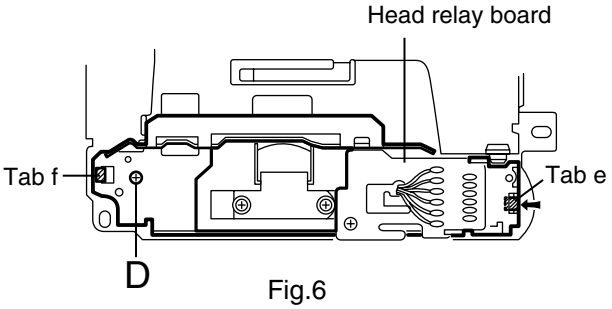

Fig.6

■ Removing the cassette holder and the holder arm in the eject mode (See Fig.7 and 8)

・Prior to performing the following procedure, remove the head relay board, the load arm and the sub chassis.

1. Remove the screw **E** attaching the reinforce bracket.
2. Remove the reinforce bracket.
3. Push the tab **g** fixing the cassette holder in the direction of the arrow and open the cassette holder and the holder arm upward until they stop at an angle of 45 degrees. Move the two joints **h** to the side and remove the cassette holder and the holder arm from the shaft.

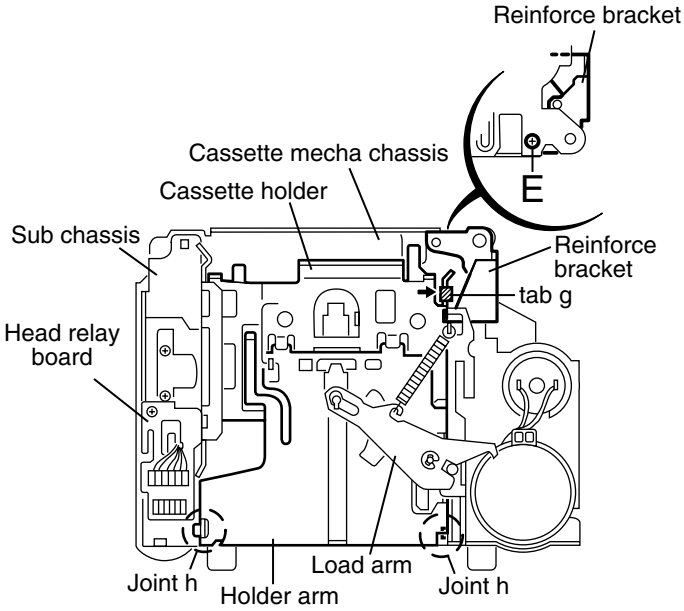

Fig.7

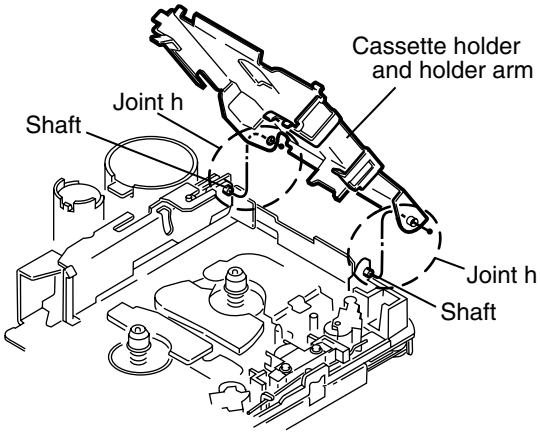

Fig.8

■ Removing the play head (See Fig.9)

・ Prior to performing the following procedure, remove the head relay board and the sub chassis.

1. Remove the two screws **F** attaching the play head (The spring under the play head comes off at the same time).

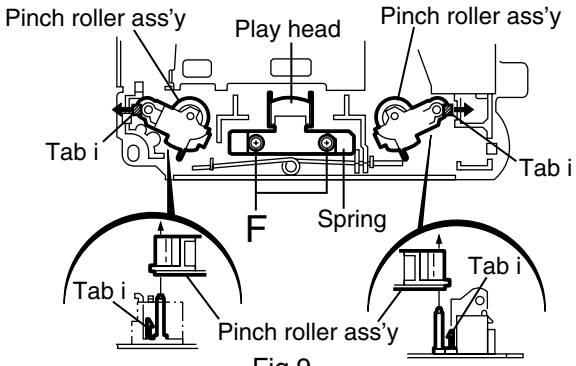

Fig.9

■ Removing the pinch roller ass'y (See Fig.9)

・ Prior to performing the following procedure, remove the head relay board and the sub chassis.

1. Push each tab **i** in the direction of the arrow and pull out the pinch rollers on both sides.

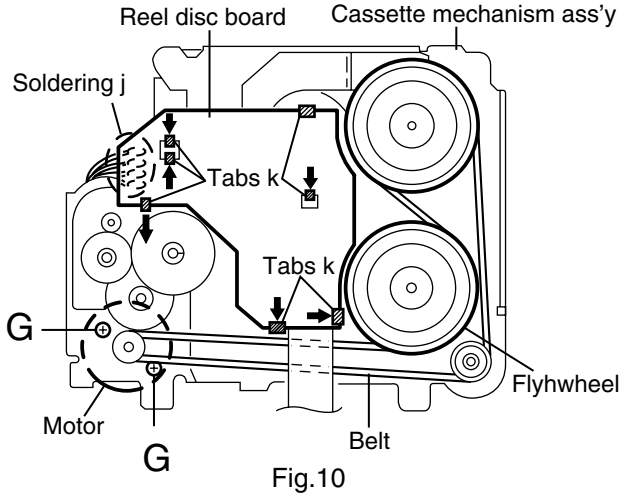

Fig.10

■ Removing the reel disc board (See Fig.10)

1. Unsolder the soldering **j** on the reel disc board.

2. Push the seven tabs **k** on the bottom of the cassette mechanism assembly in the direction of the arrow.

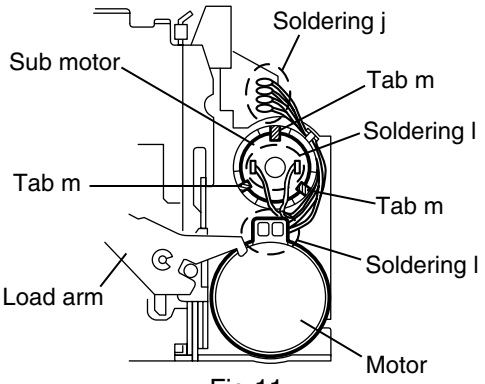

Fig.11

■ Removing the motor and the sub motor (See Fig.10 and 11)

1. Unsolder the two soldering **l** of the motor and the sub motor.

2. Release the sub motor from the three tabs **m**. Push the sub motor upward and pull out it.

3. Remove the belt on the bottom of the cassette mechanism assembly and remove the two screws **G** attaching the motor.

   ATTENTION: The motors can be detached before removing the load arm.

■ Removing the flywheel
(See Fig.10 and 12)

1. Prior to performing the following procedure, remove the head relay board, the load arm, the sub chassis, the cassette holder, the holder arm and the reel disc board.

2. Remove the belt on the bottom of the cassette mechanism ass'y.

3. Remove the slit washer attaching the flywheel on the upper side of the cassette mechanism ass'y and pull out the flywheel downward. Then remove another flywheel in the same way.

ATTENTION: When reassembling, make sure to use a new slit washer.

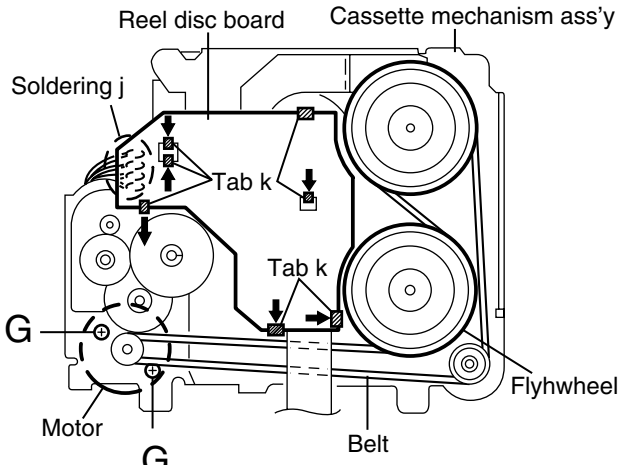

Fig.10

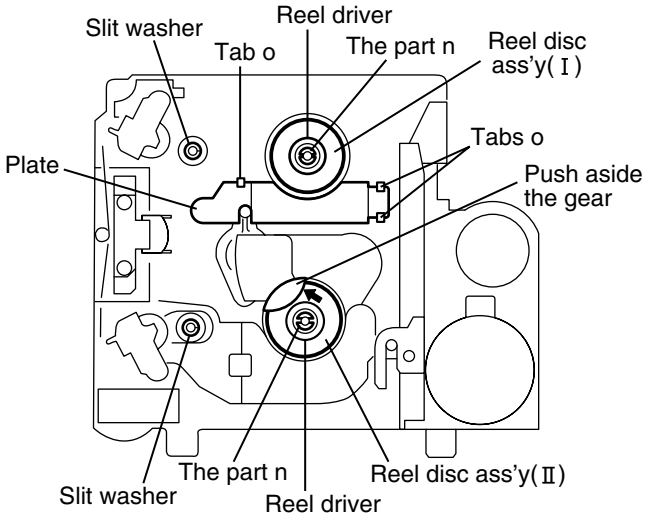

Fig.12

■ Removing the reel disc ass'y(Ⅰ)
(See Fig.12 to 14)

- Prior to performing the following procedure, remove the head relay board, the load arm, the sub chassis, the cassette holder and the holder arm.

1. Disengage the part **n** inside of the reel driver which engages with the shaft, using a pincette or something like that. Then remove the reel driver from the shaft.

2. Remove the reel driver spring and the reel table.

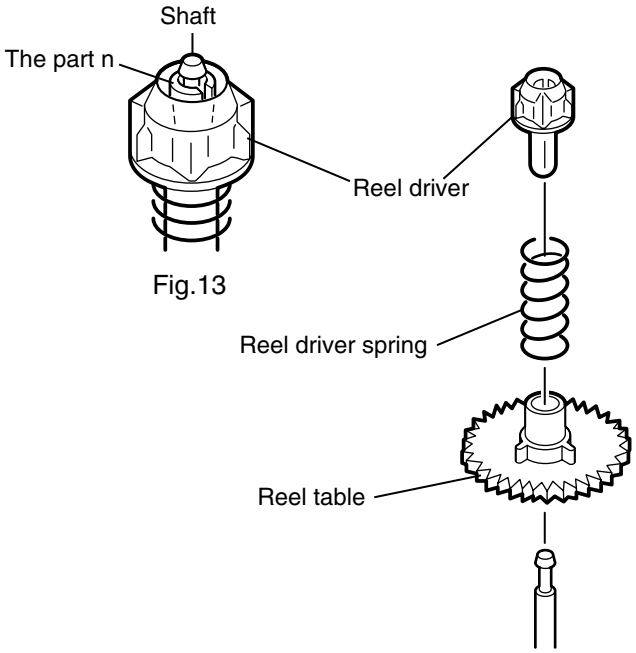

Fig.13

Fig.14

■ Removing the reel disc ass'y(Ⅱ) (See Fig.12 to 15)

ATTENTION: Prior to performing the following procedure, remove the reel disc (Ⅰ).

1. Release the plate from the three tabs **o**.

2. Push aside the gear over the reel table using a pincette or something like that.

3. Remove the reel disc ass'y (Ⅱ) as with the reel disc ass'y (Ⅰ).

ATTENTION: Do not break the front panel tab fitted to the metal cover.

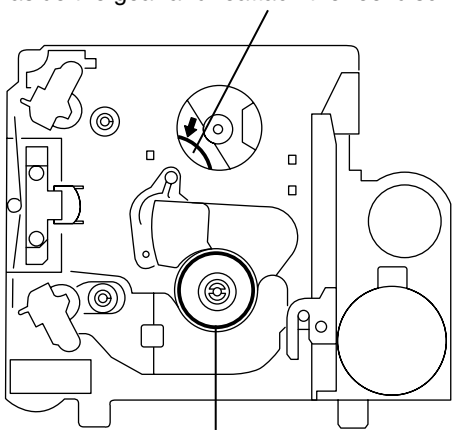

Fig.15

Adjustment method

■ Test Instruments reqired for adjustment

1.Digital oscllloscope(100MHz)
2.Frequency Counter meter
3.Electric voltmeter
4.Wow & flutter meter
5.Test Tapes

VT724 ---------- for DOLBY level measurement
VT739 ------- For playback frequency measurement
VT712 --- For wow flutter & tape speed measurement
VT703 ---------- For head azimuth measurement
6.Torque gauge ---------- Cassette type for CTG-N (mechanism adjustment)

■ Measuring conditions(Amplifier section)

Power supply voltage --------- DC14.4V(10.5~16V)
Load impedance -------- 4Ω(2Speakers connection)
Line out ---------- 20kΩ

■ Standard volume position

Balance and Bass,Treble volume .Fader

:Center(Indication"0")

Loudness,Dolby NR,Sound,Cruise:Off

Volume position is about 2V at speaker output with

following conditions.Playback the test tape VT721.

AM mode 999kHz/62dB,INT/400Hz,30%
modulation signal on receiving.
FM mono mode 97.9MHz/66dB,INT/400Hz,22.5kHz

deviation pilot off mono.

FM stereo mode 1kHz,67.5kHz dev. pilot7.5kHz dev.

Output level 0dB(1μV,50Ω/open terminal).

■ Tuner section

BAND STEP

FM : 100kHz (Seek), 50kHz (Manual)

AM : 9kHz step

DUMMY LOAD

Exclusive dummy load should be used for AM and FM dummy load,there is a loss of 6dB between SSG output and antenna input. The loss of 6dB need not be considered since direct reading of figures are applied in this working standard.

■ Arrangement of Adjusting

Cassette Mechanism Section

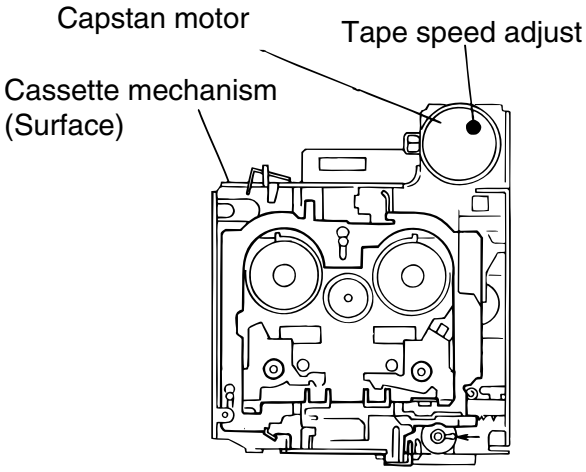

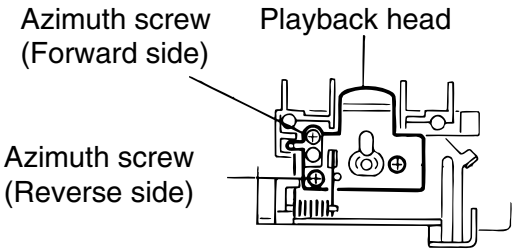

■ Arrangment of adjusting

Head amplifier board section (Reverse side)

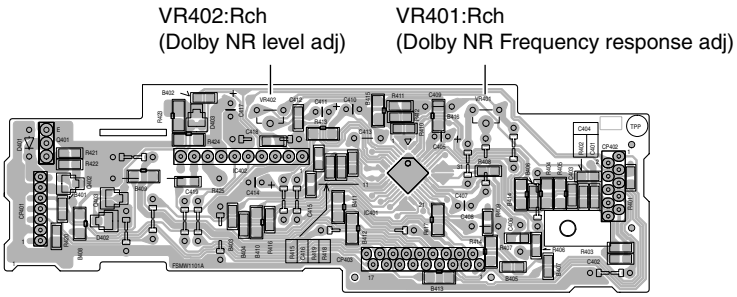

■Information for using a car audio service jig

1. We're advancing efforts to make our extension cords common for all car audio products.
   Please use this type of extension cord as follows.
2. As a U-shape type top cover is employed, this type of extension cord is needed to check operation of the mechanism assembly after disassembly.
3. Extension cord : EXTKSRT002-18P (18 pin extension cord) For connection between mechanism assembly and main board assembly.
   Check for mechanism driving section such as motor ,etc..

■Disassembly method

1. Remove the bottom cover.
2. Remove the front panel assembly.
3. Remove the top cover .
4. Install the front panel.
5. Confirm that current is being carried by connecting an extension cord jig.

Note

Available to connect to the CP701 connector when installing the front panel.

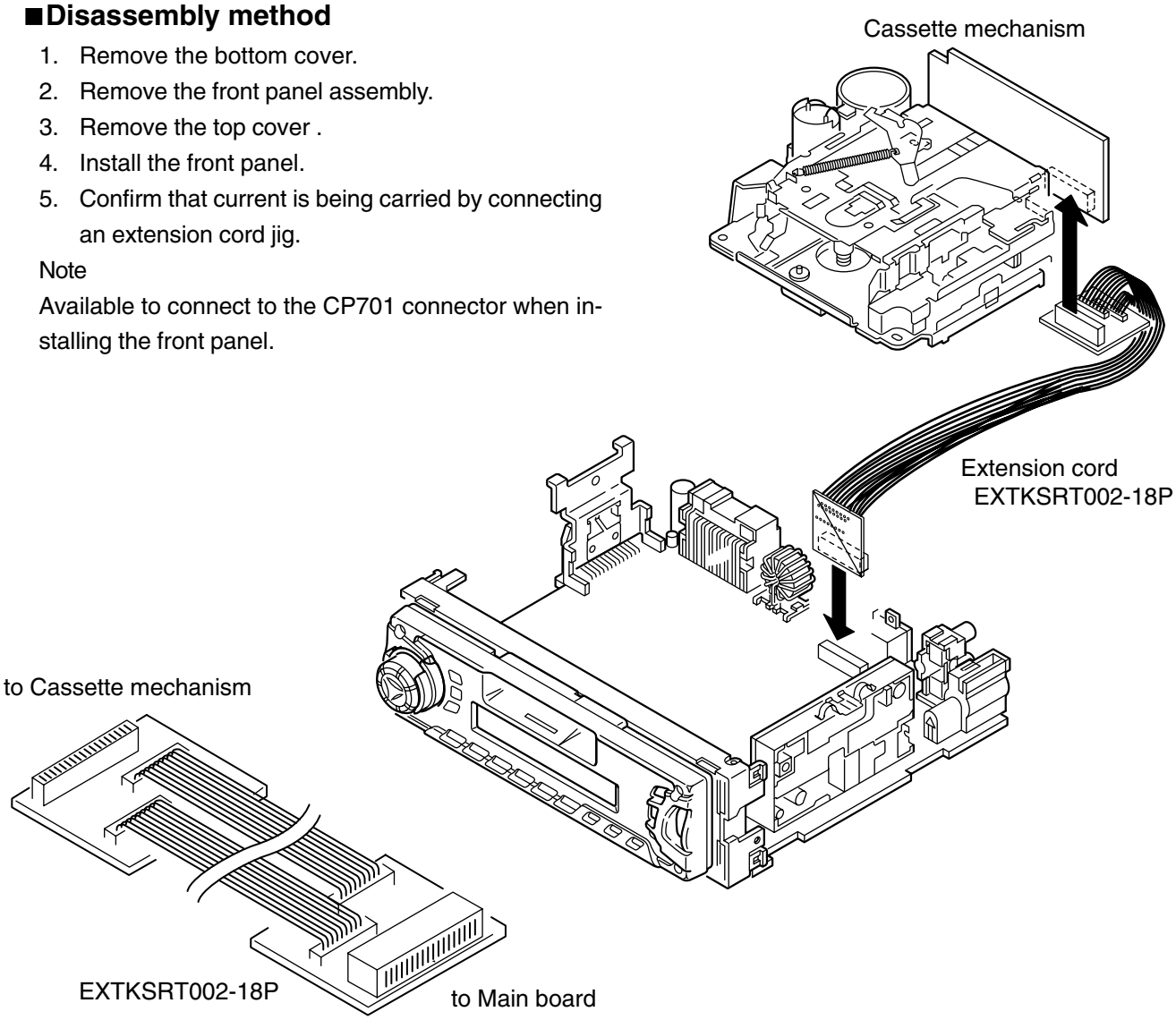

Item	Conditions	Adjustment and Confirmation methods	S.Values	Adjust
1. Head azimuth adjustment	Test tape: SCC-1659 VT703(10kHz)	◆ Head height adjustment ※ Adjust the azimuth directly. When you adjust the height using a mirror tape, remove the cassette housing from the mechanism chassis. After installing the cassette housing, perform the azimuth adjustment. 1. Load the SCC-1659 mirror tape. Adjust with height adjustment screw A and azimuth adjustment screw B so that line A of the mirror tape runs in the center between Lch and Rch in the reverse play mode. 2. After switching from REV to FWD then to REV, check that the head position set in procedure 1 is not changed. (If the position has shifted, adjust again and check.) 3. Adjust with azimuth adjustment screw B so that line B of the mirror tape runs in the center between Lch and Rch in the forward play mode. ◆ Head azimuth adjustment 1. Load VTT724 (VT724) (1kHz) and play it back in the reverse play mode. Set the Rch output level to max. 2. Load VTT703 (VT703) (10kHz) and play it back in the forward play mode. Adjust the Rch and Lch output levels to max, with azimuth adjustment screw B. In this case, the phase difference should be within 45°. 3. Engage the reverse mode and adjust the output level to max, with azimuth adjustment screw C. (The phase difference should be 45° or more.) 4. When switching between forward and reverse modes, the difference between channels should be within 3dB. (Between FWD L and R, REV L and R.) 5. When VTT721 (VT721) (315Hz) is played back, the level difference between channels should be within 1.5dB.	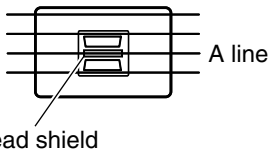 A line Head shield The head is at low position during. 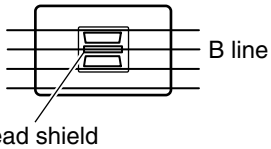 B line Head shield The head is at High position during REV. Output level: Maximum 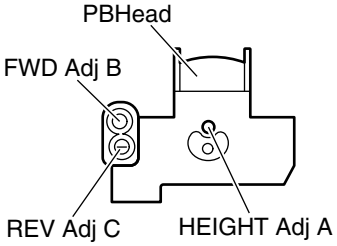 PBHead FWD Adj B REV Adj C HEIGHT Adj A 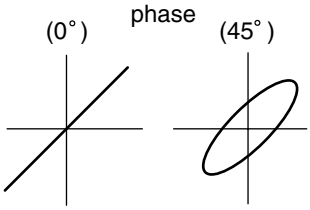 phase (0°) (45°)	
2. Tape speed and wow flutter confirmation	Test tape: VTT712 (3kHz)	1. Check to see if the reading of the F, counter / wow flutter meter is within 3015～3045(FWD / REV), and less than 0.35% (JIS RMS). 2. In case of out of specification, adjust the motor with a built-in volume resistor.	Tape speed: 3015 ～3045Hz Wow flutter: less than 0.35%	Built-in volume resistor
3. Play back frequency response confiramation	Test tape: VTT724 (1kHz) VTT739 (63Hz / 1kHz / 10kHz)	1. Play test tape VTT724, and set the volume position at 2V. 2. Play test tape VTT739 and confirm. 1kHz / 10kHz: -1 ± 3dB, 1kHz / 63Hz: 0 ± 3dB, 3. When 10kHz is out of specification, it will be necessary to read adjust the azimuth.	Speaker out 1kHz / 63Hz : 0± 3db 1kHz / 10kHz : -1± 3db	

The tuner section is of an adjustment-freedesign. In case the tuner is in trouble, replace the tuner pack.

Description of major ICs

■ TEA6320T-X (IC161) : E.volume

1.Pin layout

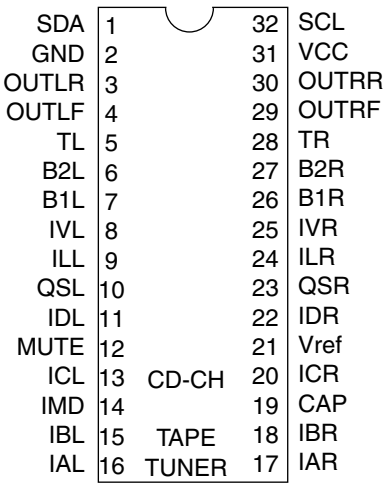

2.Block diagram

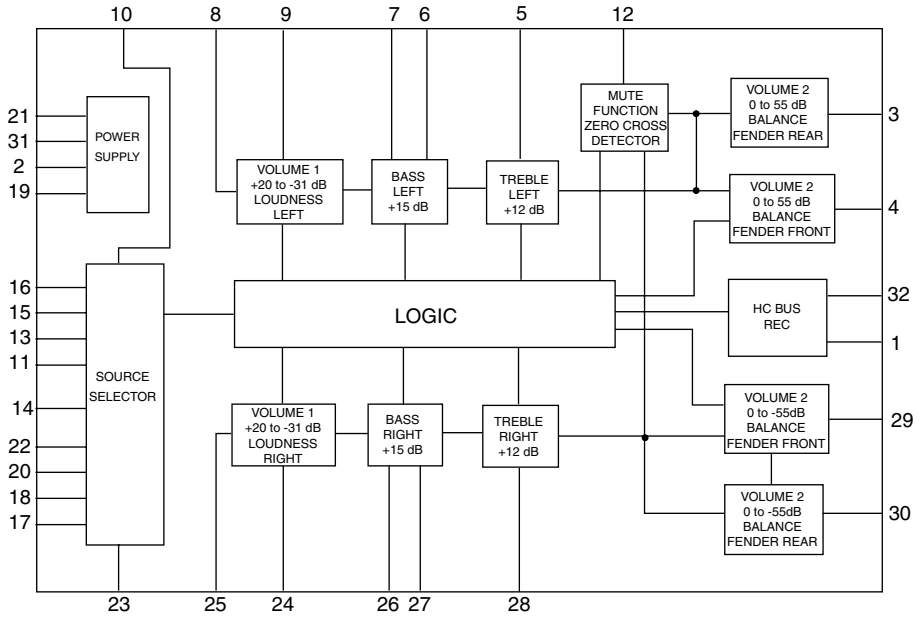

3.Pin functions

Pin No.	Symbol	I/O	Functions	Pin No.	Symbol	I/O	Functions
1	SDA	I/O	Serial data input/output.	17	IAR	I	Input A right source.
2	GND	-	Ground.	18	IBR	I	Input B right source.
3	OUTLR	O	output left rear.	19	CAP	-	Electronic filtering for supply.
4	OUTLF	O	output left front.	20	ICR	I	Input C right source.
5	TL	I	Treble control capacitor left channel or input from an external equalizer.	21	Vref	-	Reference voltage (0.5Vcc)
6	B2L	-	Bass control capacitor left channel or output to an external equalizer.	22	IDR	-	Not used
7	B1L	-	Bass control capacitor left channel.	23	QSR	O	Output source selector right channel.
8	IVL	I	Input volume 1. left control part.	24	ILR	I	Input loudness right channel.
9	ILL	I	Input loudness. left control part.	25	IVR	I	Input volume 1. right control part.
10	QSL	O	Output source selector. left channel.	26	B1R	-	Bass control capacitor right channel
11	IDL	-	Not used	27	B2R	O	Bass control capacitor right channel or output to an external equalizer.
12	MUTE	-	Not used	28	TR	I	Treble control capacitor right channel or input from an external equalizer.
13	ICL	I	Input C left source.	29	OUTRF	O	Output right front.
14	IMO	-	Not used	30	OUTRR	O	Output right rear.
15	IBL	I	Input B left source.	31	Vcc	-	Supply voltage.
16	IAL	I	Input A left source.	32	SCL	I	Serial clock input.

■ CXA2560Q (IC401) : Dolby B type noise reduction system with play back equalizer amp.

1.Pin layout & block diagram

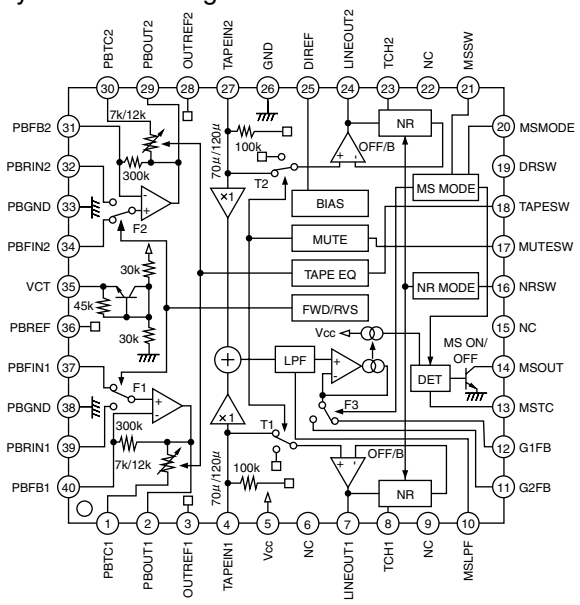

2. Pin function

Pin No.	Symbol	I/O	Function
1	PBTC1	-	Playback equalizer amplifier capacitance
2	PBOUT1	O	Playback equalizer amplifier output
3	OUTREF1	O	Output reference
4	TAPEIN1	I	TAPE input
5	Vcc	-	Power supply
6	NC	-	
7	LINEOUT1	O	Line output
8	TCH1	-	Time constant for the HLS
9	NC	-	
10	MSLPF	-	Cut-off frequency adjustment of the music sensor LPF
11	G2FB	-	Music signal interval detection
12	G1FB	-	Music signal interval detection
13	MSTC	-	Time constant for detecting music signal interval
14	MSOUT	O	Music sensor out
15	NC	-	No use
16	NRSW	I	Dolby NR control
17	MUTESW	I	Mute function control
18	TAPESW	I	Playback equalizer amplifier control
19	DRSW	I	Head select control
20	MSMODE	I	Music sensor mode control
21	MSSW	I	Music sensor control
22	NC	-	
23	TCH2	-	Time constant for the HLS
24	LINEOUT2	O	Line output

Pin No.	Symbol	I/O	Function
25	DIREF	-	Resistance for setting the reference
26	GND	-	Ground
27	TAPEIN2	I	TAPE input
28	OUTREF2	O	Output reference
29	PBOUT2	O	Playback equalizer amplifier output
30	PBTC2	-	Playback equalizer amplifier capacitance
31	PBFB2	I	Playback equalizer amplifier feedback
32	PBRIN2	I	Playback equalizer amplifier input
33	PBGND	-	Playback equalizer amplifier ground
34	PBFIN2	I	Playback equalizer amplifier input
35	VCT	O	Center
36	PBREF	O	Playback equalizer amplifier reference
37	PBFIN1	I	Playback equalizer amplifier input
38	PBGND	-	Playback equalizer amplifier ground
39	PBRIN1	I	Playback equalizer amplifier input
40	PBFB1	I	Playback equalizer amplifier feedback

■ LA4743K (IC301) : Power amp

1.Block diagram

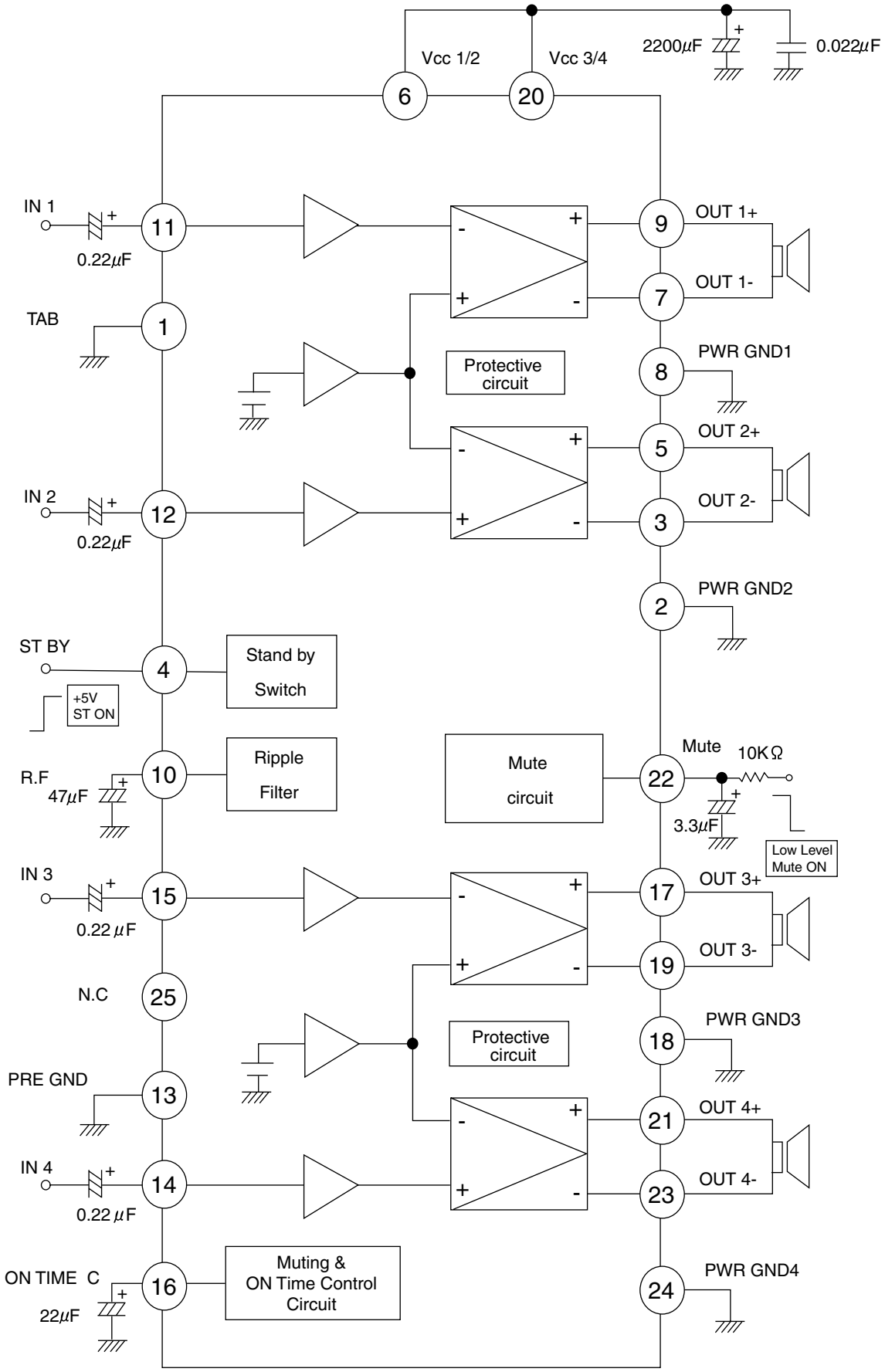

2.Terminal layout

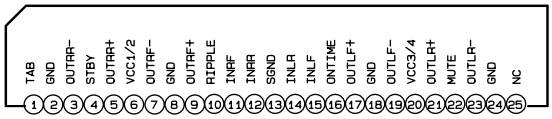

3.Pin function

LA4743K

Pin No.	Symbol	Function
1	TAB	Header of IC
2	GND	Power GND
3	RFO-	Outpur(-) for front Rch
4	STBY	Stand by input
5	RFO+	Output (+) for front Rch
6	VCC1/2	Power input
7	RRO-	Output (-) for rear Rch
8	GND	Power GND
9	RRO+	Output (+) for rear Rch
10	VREF	Ripple filter
11	RRIN	Rear Rch input
12	RFIN	Front Rch input
13	SGND	Signal GND
14	LFIN	Front Lch input
15	LRIN	Rear Lch input
16	ONTIME	Power on time control
17	LRO+	Output (+) for rear Lch
18	GND	Power GND
19	LRO-	Output (-) for rear Lch
20	VCC3/4	Power input
21	LFO+	Output (+) for front
22	MUTE	Muting control input
23	LFO-GND	Output (-) for front
24	NC	Power GND
25		No connection

■ RPM6938-SV4 (IC602) : Remote sensor

1.Block diagram

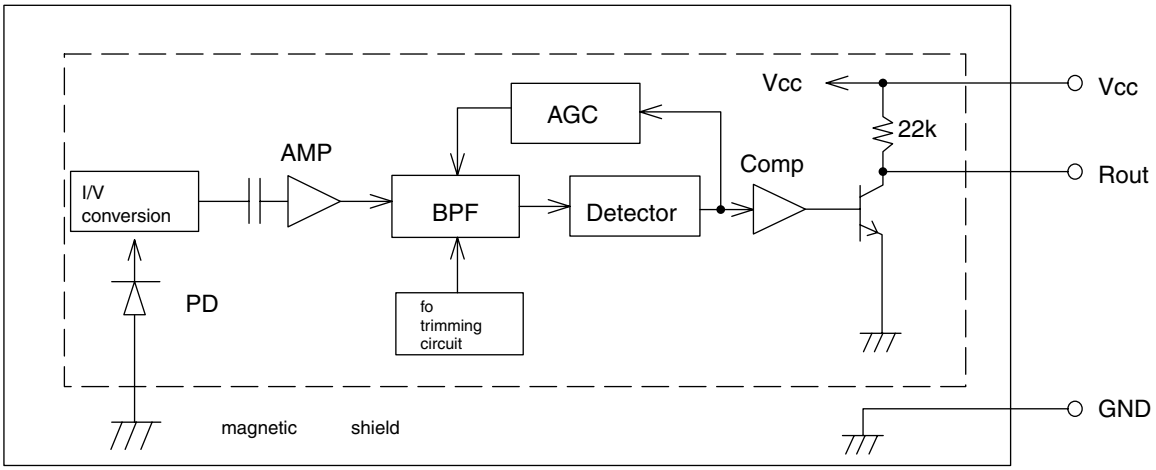

■ UPD178018AGC603 (IC701) : CPU

1. Pin layout

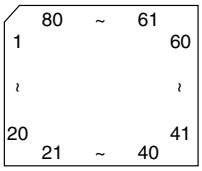

2. Pin function

Pin No.	Port Name	I/O	Descriptions
1	KEY 0	I	Key input 0
2	KEY 1	I	Key input 1
3	KEY 2	I	Key input 2
4	LEVEL	I	Level meter input
5	SM	I	S.meter level input
6	SQ	I	S.Quality level input
7	LCDCE	O	CE output to LCD driver
8	LCDDA	O	Data output to LCD driver
9	LCDSCK	O	Clock output to LCD driver
10	BUSI/O	I	I/O selector output for J-BUS, H : OUT, L: INPUT
11	OPEN	I	Door open detect input
12	BUSSI	I	J-BUS Data input
13	BUSSO	O	J-BUS Data output
14	BUSSCK	I/O	J-BUS Clock in/output
15	NC	-	Non connect
16	NC	-	Non connect
17	NC	-	Non connect
18	NC	-	Non connect
19	INLOCK	-	Non connect
20	NC	-	Non connect
21	GNDPORT	-	Port GND
22	VDDPORT	-	Port Vdd
23	NC	O	Non connect
24	AFCK	O	AF check output, L: AF check
25	MONO	O	Monaural on /off selecting output, H:mono on
26	FM/AM	O	FM/AM switching output L : FM H : AM
27	SEEK/STOP	O	Auto seek /stop selecting output, H: Seek, L:Stop
28	NC	I	Pulse signal input port for Cruise control
29	IFC	I	FM/AM midle frequency counter input
30	VDDPLL	-	PLL Vdd
31	FMOSC	I	FM/AM limited generator frequency input
32	NC	-	None connect
33	GNDPLL	-	PLL GND
34	AMEO	O	AM error out output
35	FMEO	O	FM error out output
36	IC	-	GND
37	SD/ST	I	Station detector, Stereo signal input, H:Find Station, L:Stereo
38	STAGE0	I	Pull up
39	NC	-	Non connect
40	MOTOR	O	Main motor output

UPD178018AGC603(2/2)

Pin No.	Port Name	I/O	Descriptions
41	FF/REW	I	Output for input signal level switching for MS L : FF,REW H : PLAY
42	F/R	O	FWD,REV running direction switch signal input
43	DOLBY	O	Dolby on "H" output
44	MSIN	I	MS input
45	I2CCLK	O	I2C information clock output
46	I2CDAO	O	I2C information data output
47	I2CDAI	I	I2C information clock input
48	REEL	O	Switch for detecting tape end position
49	SUBMO1	I	Sub motor clock direction input
50	SUBMO2	O	Sub motor clock opposite detection drive output
51	MODE	O	Mechanism mode position detection input
52	TAPEIN	O	Cassette in detection input H : cassette in L : cassette out
53	STANDBY	I	Standby position detection input H : eject side L : operation side
54	NC	-	Non connect
55	NC	-	Non connect
56	NC	-	Non connect
57	NC	-	Non connect
58	NC	-	Non connect
59	BEEP	O	Touch tone output
60	MUTE	O	Mute output , L : mute on
61	PCNT	O	Power ON /OFF switching output , H : power on
62	TELMUTE	I	Telephone mute signal detection input
63	DIMIN	I	Dimmer signal detection input L : dimmer
64	DIMOUT	O	Dimmer control output , Dimmer off L output
65	ENC1	I	Rotary volume signal 1 input Power save : L
66	ENC2	I	Rotary volume signal 2 input
67	ACCDET	I	Power save 1 Working togethe ACC Power save : L
68	POWER	O	Power save 2, Working together Back up by H input, stop mode
69	RDSSCK	I	Clock input for RDS
70	RDSDA	I	RDS data input
71	REMOCON	I	Remocom input
72	DETACH	I	Detach signal input H : Power save
73	J-BUSINT	I	Cut-in input for J-BUS signal
74	REGCPU	-	Regulator for CPU power supply, Connect the GND with 0.1μ F.
75	GND	-	Ground
76	X2	-	Connecting the crystal oscillator for system clock
77	X1	I	Connecting the crystal oscillator for system clock
78	REGOSC	-	Regulator for oscillator circuit.Connect the GND with 0.1μF.
79	VDD	-	Vdd
80	RESET	-	Pull up

■ HA13164A (IC901) : Regulator

1.Terminal layout

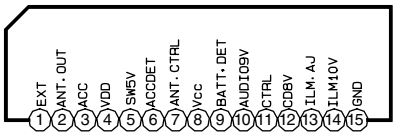

2.Block diagram

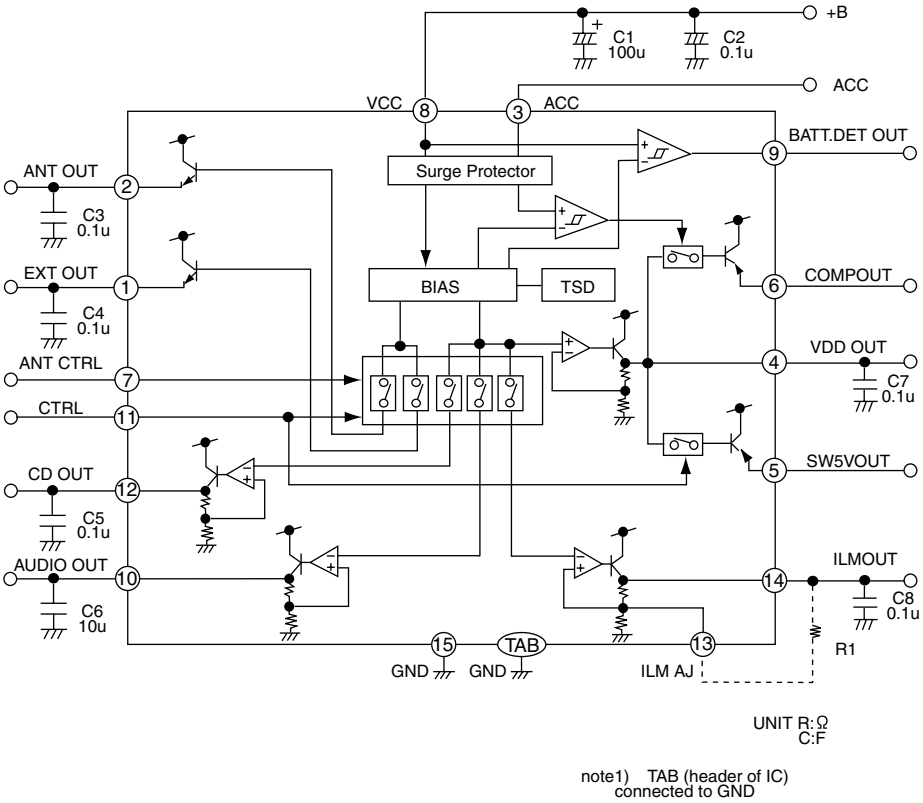

3.Pin function

Pin No.	Symbol	Function
1	EXTOUT	Output voltage is VCC-1 V when M or H level applied to CTRL pin.
2	ANTOUT	Output voltage is VCC-1 V when M or H level to CTRL pin and H level to ANT-CTRL.
3	ACCIN	Connected to ACC.
4	VDDOUT	Regular 5.7V.
5	SW5VOUT	Output voltage is 5V when M or H level applied to CTRL pin.
6	COMPOUT	Output for ACC detector.
7	ANT CTRL	L:ANT output OFF , H:ANT output ON
8	VCC	Connected to VCC.
9	BATT DET	Low battery detect.
10	AUDIO OUT	Output voltage is 9V when M or H level applied to CTRL pin.
11	CTRL	L:BIAS OFF, M:BIAS ON, H:CD ON
12	CD OUT	Output voltage is 8V when H level applied to CTRL pin.
13	ILM AJ	Adjustment pin for ILM output voltage.
14	ILM OUT	Output voltage is 10V when M or H level applied to CTRL pin.
15	GND	Connected to GND.

■ HD74HC126FP-X (IC801) : Buffer

1.Terminal layout

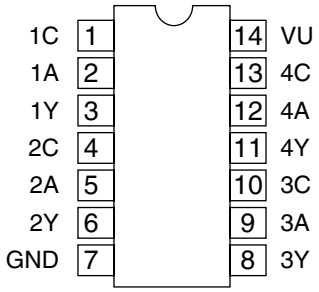

3.Pin function

Input		Output
C	A	Y
L	X	Z
H	L	H
H	H	L

Note) H:High level
L:Low level
X:Irrelevant
Z:Off(High-impedance)
State a 3-state input

2.Block diagram

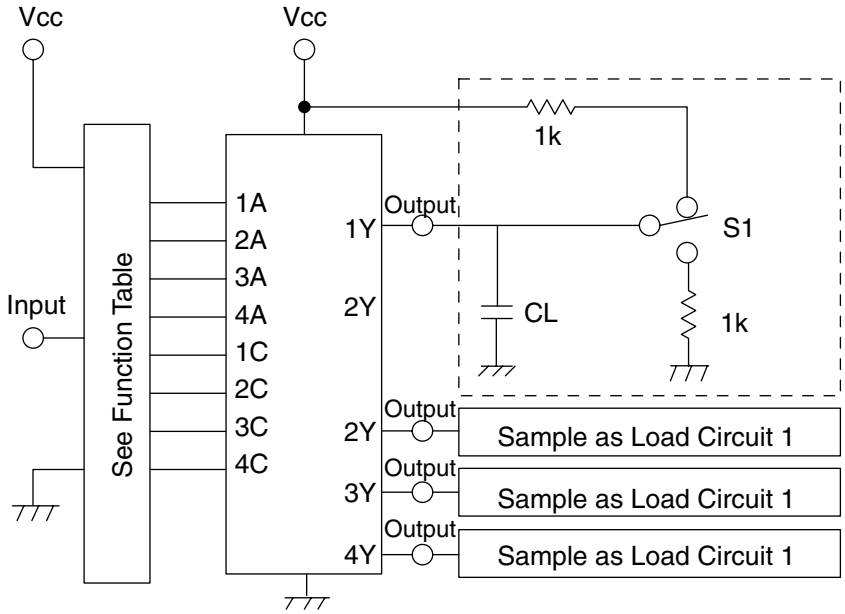

Note) CL includes probe and jig capacitance

■ LB1641 (IC402) : DC motor driver

1. Pin layout

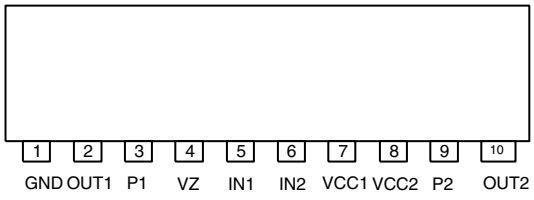

2. Pin function

Input		Output		Mode
IN1	IN2	OUT1	OUT2	
0	0	0	0	Brake
1	0	1	0	CLOCKWISE
0	1	0	1	COUNTER-CLOCKWISE
1	1	0	0	Brake

■ LC75873NW (IC601) : LCD driver

1.Pin layout

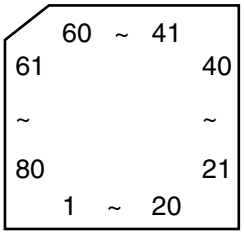

2.Block diagram

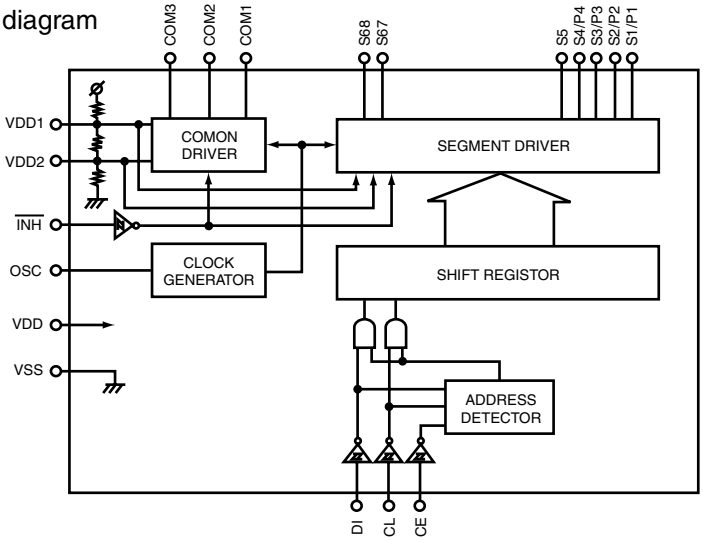

3.Pin function

Pin No.	Pin name	I/O	Description
79,80 1,2,3 to 66	S1/P1 TO S4/P4 S5 to S68	O	Segment outouts for displaying the display data transferred by serial data input. The S1/P1 to S4/P4 pins can be used as general-purpose output ports under serial data control.
67 78 69	COM1 COM2 COM3	O	Common driver outputs. The frame frequency f0 is given by : f0 = (FOSC/384)Hz.
74	OSC	I/O	Oscillator connection An oscillator circuit is formed by connecting an external resistor and capacitor to this pin.
76 77 78	CE CL DI	I I I	Serial data transfer inputs. Connected to the controller. CE:Chip enable CL:Synchronization clock DI:Transfer data
75	$\overline{\text{INH}}$	I	Display off control input ・$\overline{\text{INH}}$= "L"(VSS) ･･･ Display forced off S1/P1 to S4/P4 = "L" (These pins are forcibly set to the segment output port function and held at the low level.) S5 to S68 = "L" COM1 to COM3"L" ・$\overline{\text{INH}}$ = "H"(HDD) ･･･ Display on However, serial data transfer is possible when the display is forced off by this pin.
71	VDD1	I	Used for applying the LCD drive 2/3 bias voltage externally. Must be connected to VDD2 when a 1/2 bias drive scheme is used.
72	VDD2	I	Used for applying the LCD drive 1/3 bias voltage externally. Must be connected to VDD1 when a 1/2 bias drive scheme is used.
70	VDD	-	Power supply connection. Provide a voltage of between 3.0 and 6.0V.
73	VSS	-	Power supply connection. Connect to ground.

■ SAA6579T-X (IC71) : RDS

1.Pin layout

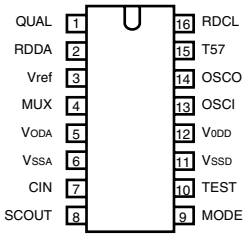

2.Block diagram

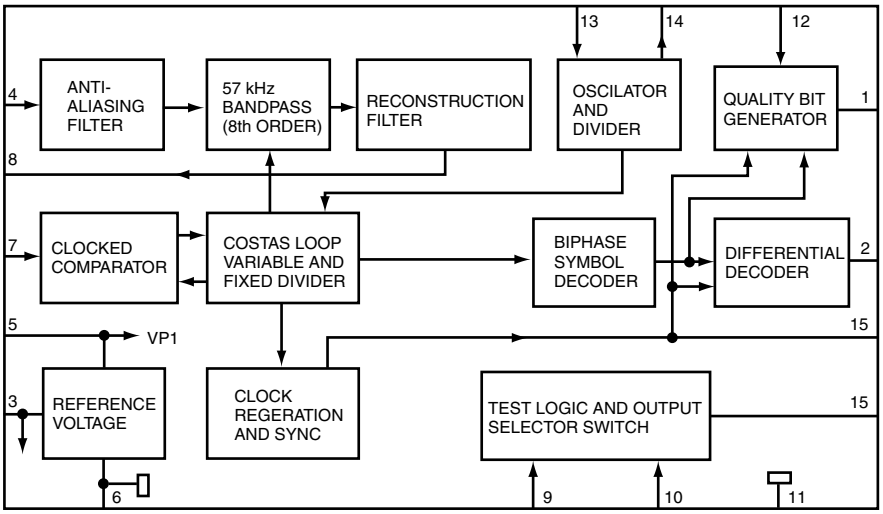

3.Pin function

Pin No.	Symbol	Description
1	QUAL	Quality indication output
2	RDDA	RDS data output
3	Vref	Reference voltage output (0.5VDDA)
4	MUX	Multiolex signal input
5	VDDA	+5V supply voltage for analog part
6	VSSA	Ground for analog part (0V)
7	CIN	Subcarrier input to comparator
8	SCOUT	Subcarrier output of reconstruction filter
9	MODE	Oscllator mode / test control input
10	TEST	Test enable input
11	VSSD	Ground for digital part (0V)
12	VDDD	+5V supply voltage for digital part
13	OSCI	Oscillator input
14	OSCO	Oscillator output
15	T57	57 kHz clock signal output
16	RDCL	RDS clock output

VICTOR COMPANY OF JAPAN, LIMITED
MOBILE ELECTRONICS DIVISION
PERSONAL & MOBILE NETWORK BUSINESS UNIT. 10-1,1Chome,Ohwatari-machi,Maebashi-city,371-8543,Japan

200202

(No.49692)

Block diagram

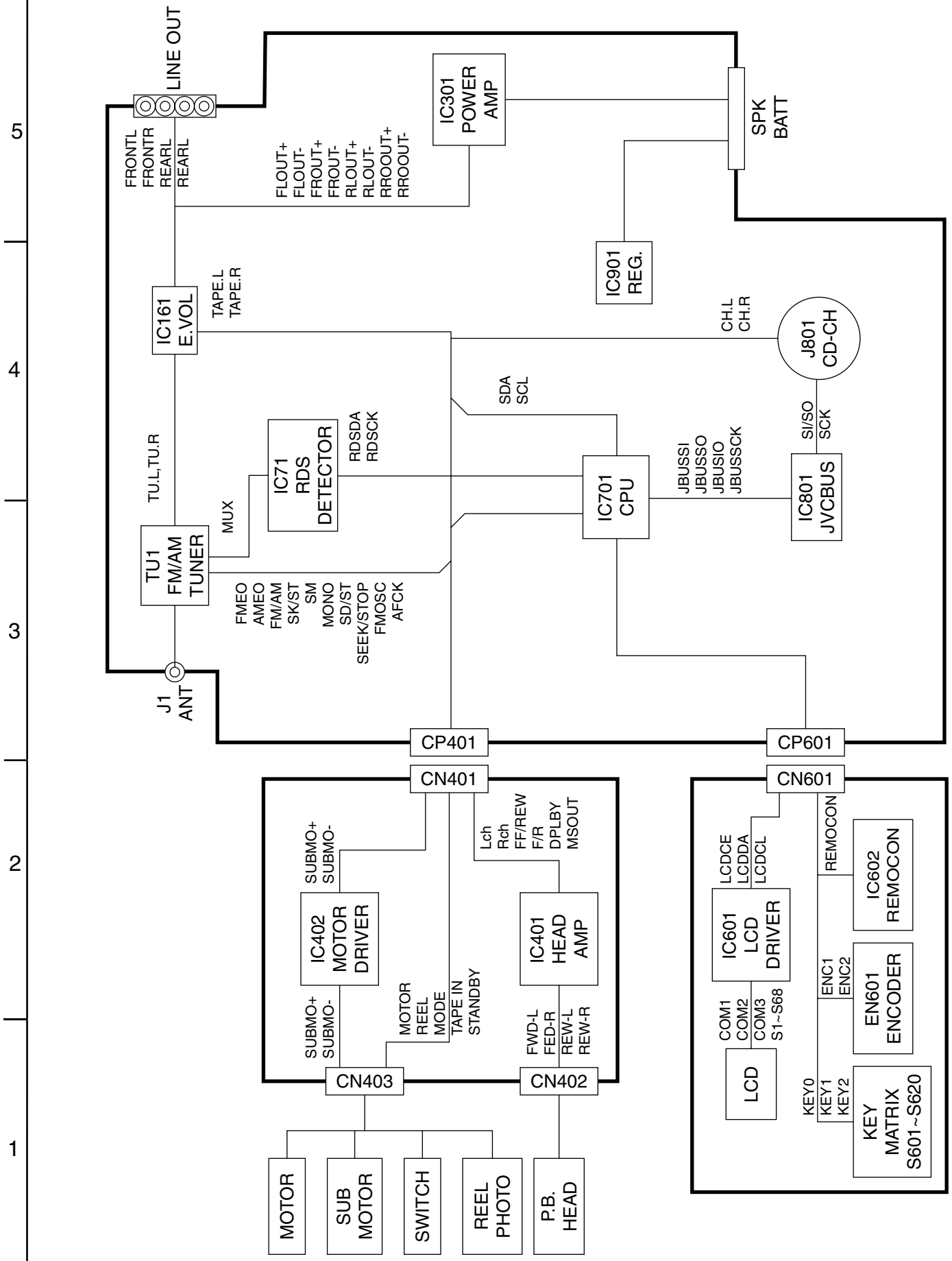

< MEMO >

Standard schematic diagrams

■ Main amp section

NOTES
1. CONDITION---FM
   VOLTAGES ARE DC-MEASURED WITH A DIGITAL VOLT METER WITHOUT INPUT SIGNAL
   CONDITION---FM MODE. ▭ AM MODE
2. UNLESS OTHERWISE SPECIFIED.
   ALL RESISTORS ARE 1/10W OR 1/4W ±5% METAL GLAZE RESISTOR.
   ALL CAPACITORS ARE 50V OR 25V CERAMIC CAPACITOR.
   ALL RESISTANCE VALUES ARE IN OHM.
   ALL CAPACITANCE VALUES ARE IN μF(p=pF)
   ALL E.CAPACITORS ARE SHOWN IN THE FORM OF CAPACITANCE(uF)/RATED VOLTAGE(V)

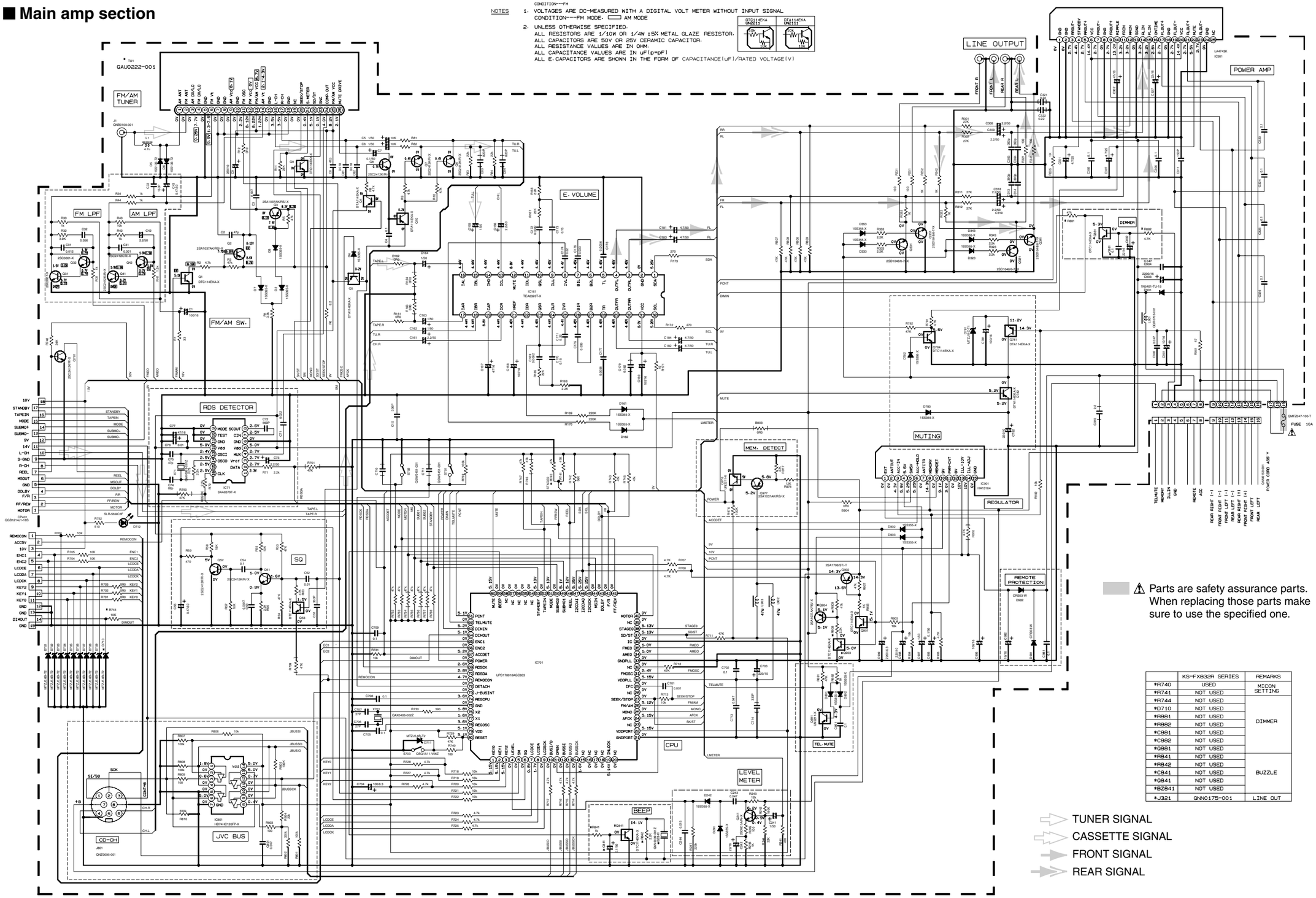

⚠ Parts are safety assurance parts. When replacing those parts make sure to use the specified one.

	KS-FX832R SERIES	REMARKS
*R740	USED	MICON SETTING
*R741	NOT USED	
*R744	NOT USED	
*D710	NOT USED	DIMMER
*R881	NOT USED	
*R882	NOT USED	
*C881	NOT USED	
*C882	NOT USED	
*Q881	NOT USED	
*R841	NOT USED	
*R842	NOT USED	BUZZLE
*C841	NOT USED	
*Q841	NOT USED	
*BZ841	NOT USED	
*J321	QNN0175-001	LINE OUT

⇨ TUNER SIGNAL
⇨ CASSETTE SIGNAL
⇨ FRONT SIGNAL
⇨ REAR SIGNAL

MAIN PWB : GEB10004

■ Cassette mechanism section

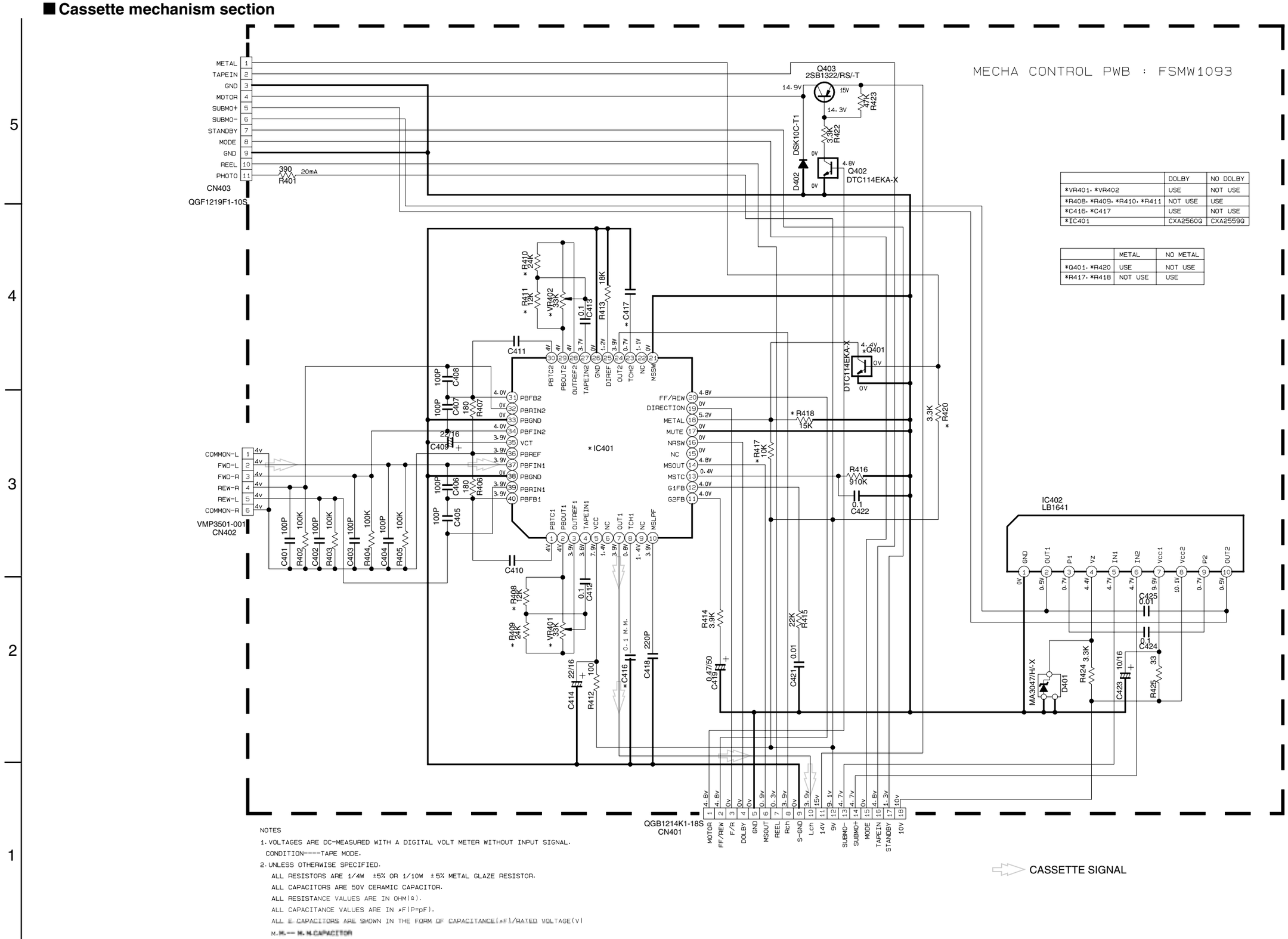

	DOLBY	NO DOLBY
*VR401, *VR402	USE	NOT USE
*R408, *R409, *R410, *R411	NOT USE	USE
*C416, *C417	USE	NOT USE
*IC401	CXA2560Q	CXA2559Q

	METAL	NO METAL
*Q401, *R420	USE	NOT USE
*R417, *R418	NOT USE	USE

NOTES

1. VOLTAGES ARE DC-MEASURED WITH A DIGITAL VOLT METER WITHOUT INPUT SIGNAL.
   CONDITION----TAPE MODE.
2. UNLESS OTHERWISE SPECIFIED.
   ALL RESISTORS ARE 1/4W ±5% OR 1/10W ±5% METAL GLAZE RESISTOR.
   ALL CAPACITORS ARE 50V CERAMIC CAPACITOR.
   ALL RESISTANCE VALUES ARE IN OHM(Ω).
   ALL CAPACITANCE VALUES ARE IN μF(P=pF).
   ALL E CAPACITORS ARE SHOWN IN THE FORM OF CAPACITANCE(μF)/RATED VOLTAGE(V)
   M.M.--- M.M.CAPACITOR

■ LCD & Key control section

*D601	SML-310LT/MN/-X
*D602, *D603, *D604, *D605, *D606 *D607, *D608, *D609, *D610, *D611 *D612, *D613, *D614, *D615, *D616 *D617, *D618, *D622, *D623 *D628, *D629	SML-310VT/JK/-X (RED)
*D624	NOT USED
*D621	LNJ308G81/1-3/X
*D619, *D620	SML-310VT/JK/-X
*D641, *D643	NSPW310BS/BRS/
*D642	NSPW310BS/BQ/
*R645, *R646	NOT USED
*Q641, *Q642	NOT USED
*R641, *R642, *R643	1K
*R644	0R0
*IC602	USED
*D657	USED
*C606	USED
*R657, *R658	USED
*B601, *B602, *B603	NOT USED

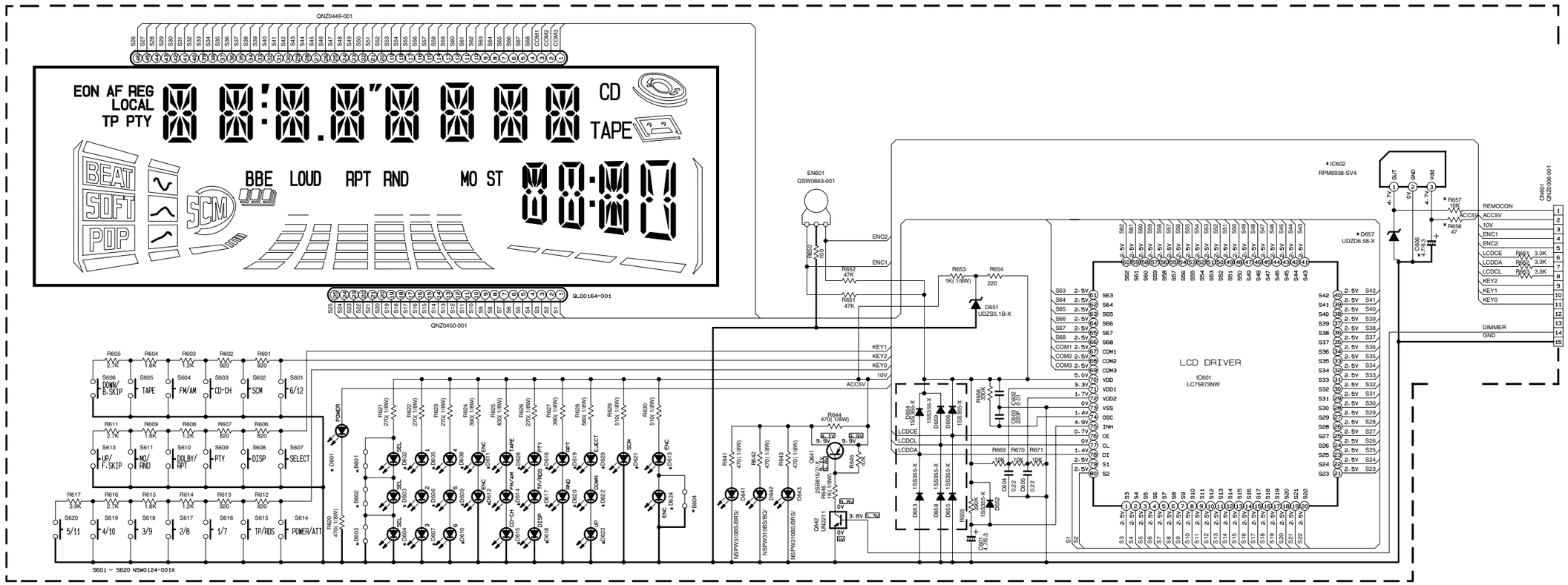

SWITCH PWB : GEB10013

KS-FX832R

Printed circuit boards

■ Main board (Forward side)

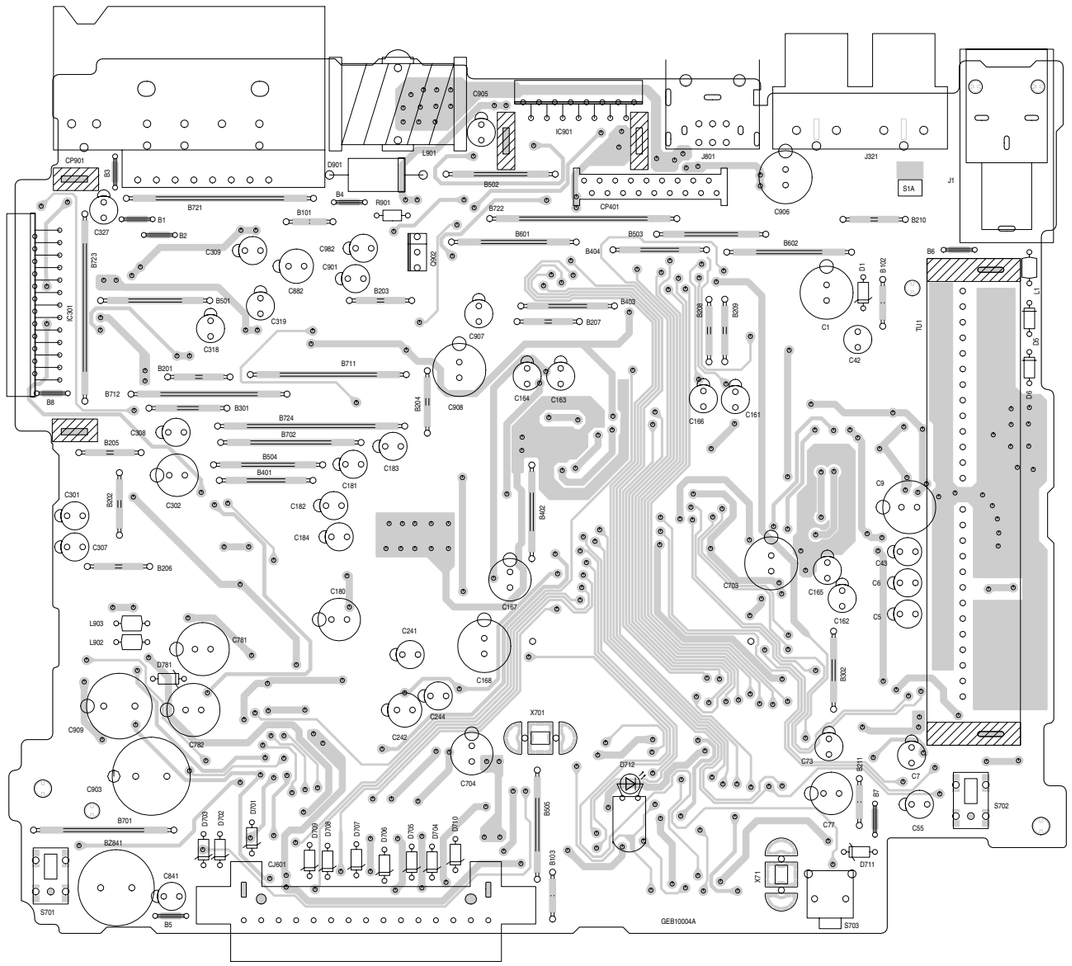

■ Main board (Reverse side)

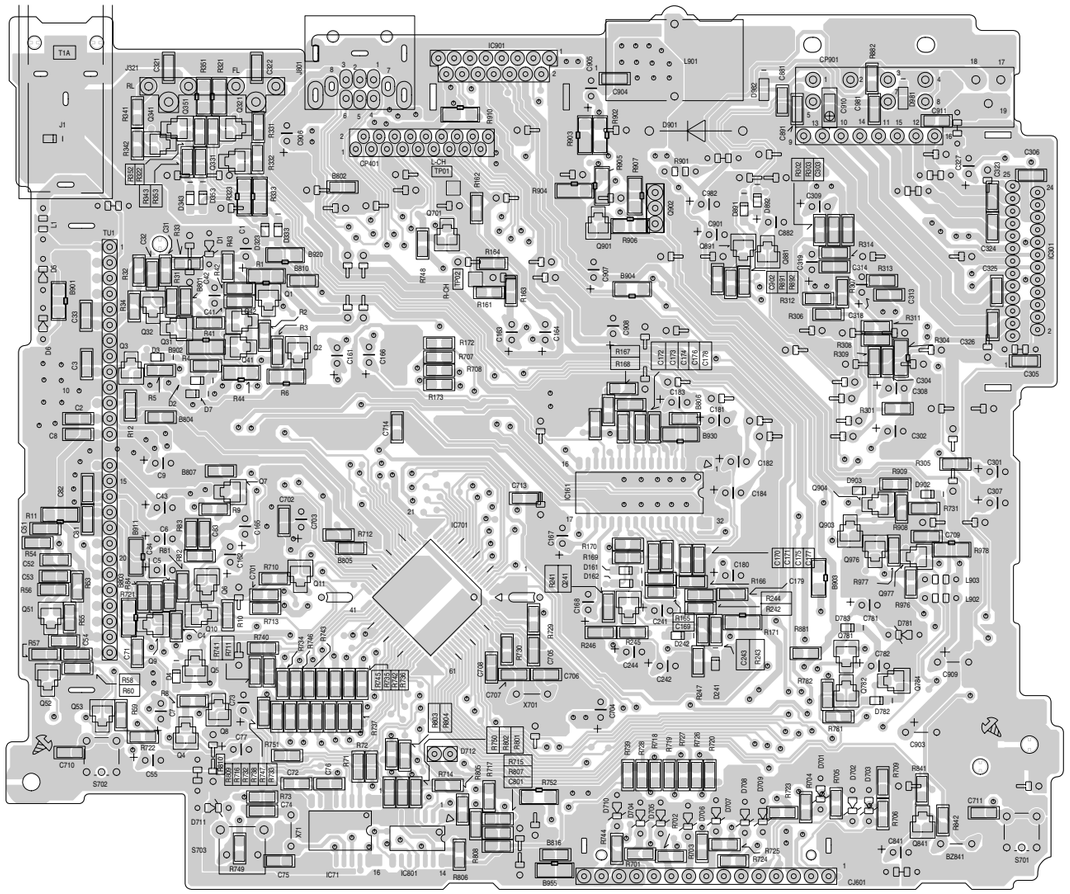

■ Front board (Forward side)

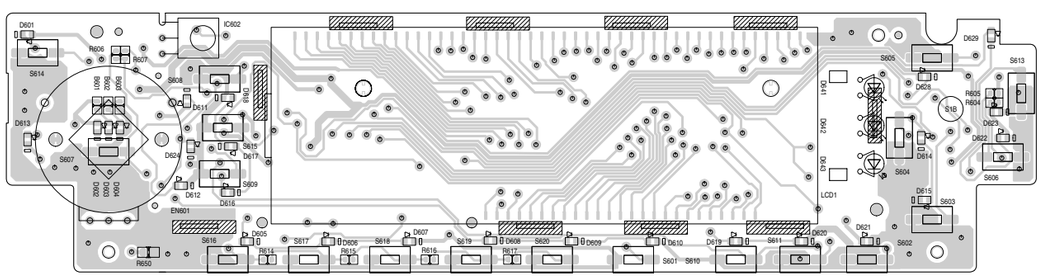

■ Front board (Reverse side)

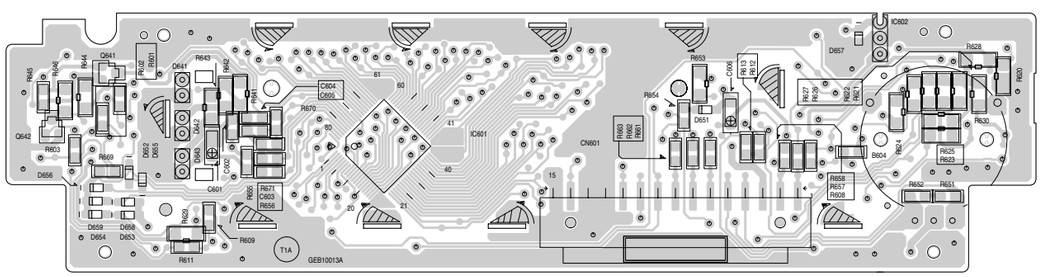

■ Mechanism conrol board

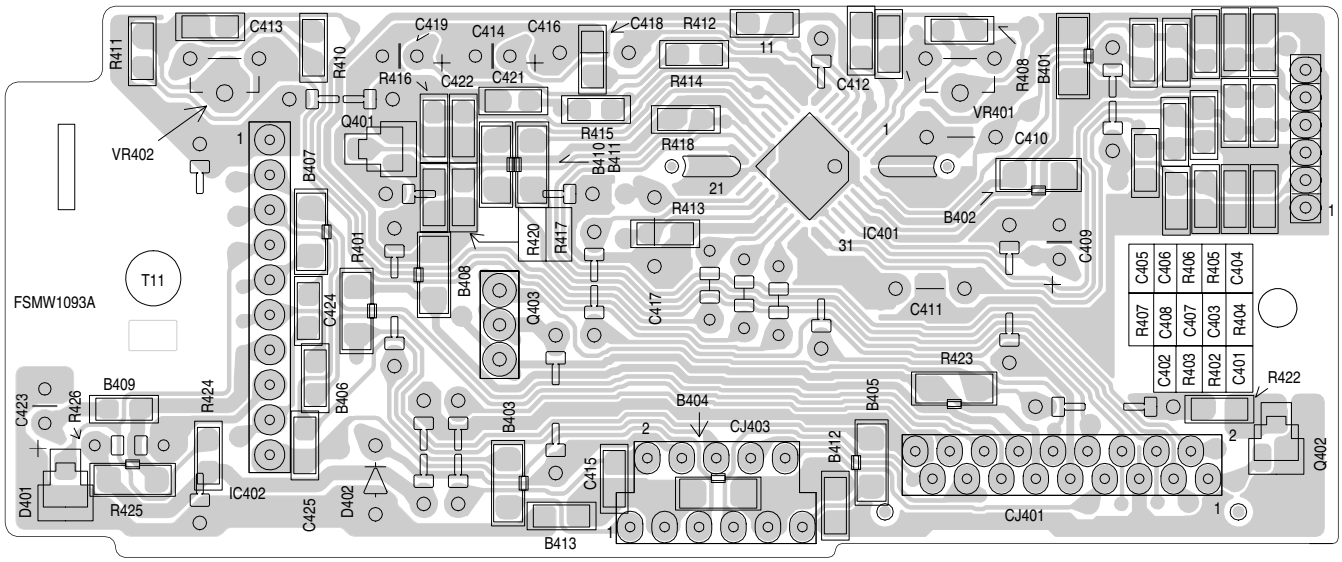

PARTS LIST

[KS-FX832R]

* All printed circuit boards and its assemblies are not available as service parts.

Area suffix

E ---------- Continental Europe

- Contents -

Exploded view of general assembly and parts list (Block No.M1) ---------- 3- 2
Cassette mechanism assembly and parts list (Block No.MP) ---------- 3- 5
Electrical parts list (Block No.01~03) ---------- 3-10
Packing materials and accessories parts list (Block No.M3,M5) ---------- 3-16

Exploded view of general assembly and parts list

Block No. M 1 M M

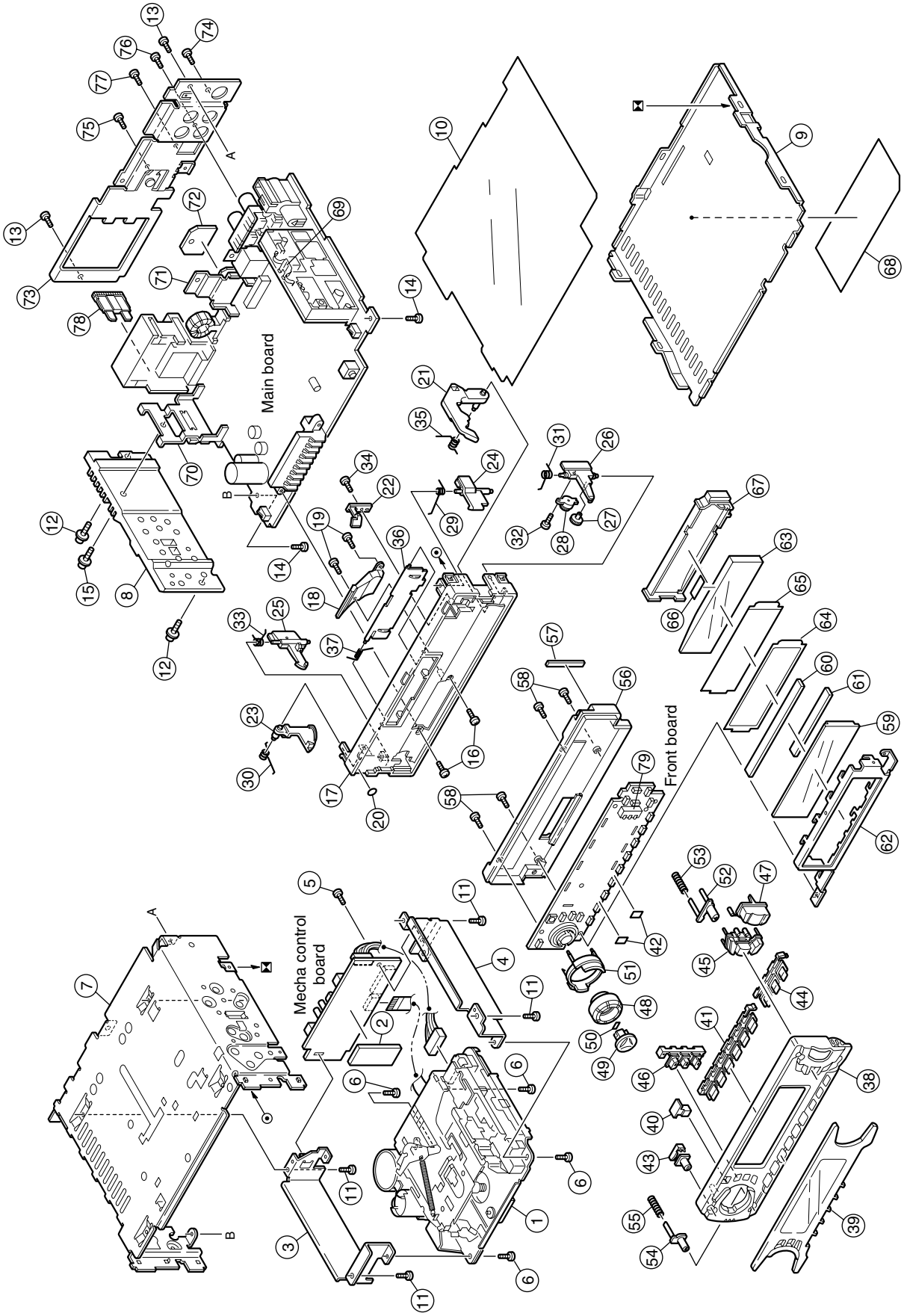

■ Parts list (General assembly)

Block No. M1MM

⚠	Item	Parts number	Parts name	Q'ty	Description	Area
	1	----------	CASSETTE MECHA	1	CDS-801	
	2	FSYH4036-050	SHEET	1		
	3	FSKL2001-004	MECHA BRACKET(L	1		
	4	FSKL2002-002	MECHA BRACKET(R	1		
	5	QYSDST2606Z	SCREW	1		
	6	QYSDST2606Z	SCREW	4		
	7	FSJC1056-002	TOP CHASSIS	1		
	8	FSMH3001-202	SIDE PANEL	1		
	9	FSKM3011-002	BOTTOM COVER	1		
	10	FSMA3005-001	INSULATOR	1		
	11	QYSDST2604Z	SCREW	4	CHASSIS+MECHA.B	
	12	FSKZ4005-001	SCREW	2	CHASSIS+SIDE PA	
	13	QYSDST2604Z	SCREW	2	CHASSIS+REAR BK	
	14	QYSDST2606Z	SCREW	2	CHASSIS+MAIN PW	
	15	FSKZ4005-001	SCREW	1	SIDE PANEL+IC B	
	16	QYSDSF2006M	SCREW	2	F.CHASSIS+CONEC	
	17	FSJC1060-002	FRONT CHASSIS	1		
	18	VJK3707-001	LIGHT LENS	1		
	19	QYSPSGU1745N	MINI SCREW	2	FOR LIGHT LENS	
	20	FSYH4036-046	SHEET	1		
	21	FSKS3014-001	OPEN LEVER	1		
	22	FSKS3015-001	LOCK LEVER(O.L)	1		
	23	VKS3798-002	RELEASE LEVER	1		
	24	VKS3793-001	LOCK LEVER(TOP)	1		
	25	VKS3794-003	LOCK LEVER(L)	1		
	26	VKS3795-002	LOCK LEVER(R)	1		
	27	VKS5563-001	GEAR	1		
	28	VKZ4786-002	OIL DAMPER	1		
	29	FSKW4012-001	T.SPRING	1	FOR L.LEVER(TOP	
	30	GE40144-001A	T.SPRING	1	FOR RELEASE LEV	
	31	VKW5262-001	T.SPRING	1	FOR L.LEVER(R)	
	32	QYSDSF2006M	SCREW	1	DAMPER+L.LEVER(	
	33	VKW5263-002	T.SPRING	1	FOR L.LEVER(L)	
	34	VKZ4777-001	MINI SCREW	1	LOCK LEVER(O.L.	
	35	FSKW4013-002	T.SPRING	1	FOR OPEN LEVER	
	36	FSJC3014-001	CASSETTE LID	1	NO PRINTING	
	37	VKW4947-002	DOOR SPRING	1		
	38	GE10005-001B	FRONT PANEL	1		
	39	GE30113-015B	FINDER ASSY	1		
	40	FSJK4009-001	REMOTE LENS	1	FOR REMOTE CON.	
	41	GE20104-002A	PRESET BUTTON	1	1-6 (2 COLOUR)	
	42	FSYH4036-069	SHEET	2	PRESET BTN	
	43	GE30105-002B	POWER BUTTON	1		
	44	GE30106-001A	SND FUNC BUTTON	1	RPT,RND,SCM	
	45	GE20110-001C	D.FUNCT BUTTON	1	TAPE,F/A,CD-CH	
	46	GE20103-001A	PUSH BUTTON(3)	1		
	47	GE20109-001C	UP DOWN BUTTON	1		
	48	GE30546-001A	KNOB	1	JOG DIAL	

■ Parts list (General assembly)

Block No. M1MM

⚠	Item	Parts number	Parts name	Q'ty	Description	Area
	49	GE30366-001A	SEL BUTTON	1		
	50	FSYH4036-032	SHEET	1	SEL BTN	
	51	GE30104-001A	RIM LENS	1	FOR KNOB	
	52	GE30115-002A	EJECT BUTTON	1		
	53	VKW3001-330	COMP.SPRING	1	FOR EJECT BUTTO	
	54	GE30116-001A	DETACH BUTTON	1		
	55	VKW3001-330	COMP.SPRING	1	FOR DETACH BUTT	
	56	GE10006-001B	REAR COVER	1		
	57	FSYH4036-035	SHEET	1	REAR COVER	
	58	VKZ4777-001	MINI SCREW	4	FRONT+REAR	
	59	QLD0164-001	LCD MODULE	1		
	60	QNZ0449-001	RUBBER CONNECTO	1		
	61	QNZ0450-001	RUBBER CONNECTO	1		
	62	GE30114-001A	LCD CASE	1		
	63	FSJK3028-001	LCD LENS	1		
	64	FSYH4061-001	LIGHT SHEET	1		
	65	FSYH4061-002	LIGHT SHEET	1		
	66	FSYH4036-052	SHEET	1		
	67	FSKS3013-001	LENS CASE	1		
	68	GE30334-002A	NAME PLATE	1		
	69	VMA4652-001SS	EARTH PLATE	1		
	70	FSKL4024-001	IC BRACKET	1		
	71	GE40103-001A	REGULAT.BRACKET	1		
	72	GE40104-002B	HEAT SINK	1		
	73	FSKM3012-014	REAR BRACKET	1		
	74	QYSDST2606Z	SCREW	1	REAR BKT+ANT JA	
	75	QYSDST2606Z	SCREW	1	REAR BKT+REG BK	
	76	QYSDSF3006Z	SCREW	1	REAR BKT+PIN JA	
	77	QYSDST2606Z	SCREW	1	REAR BKT+CD IN	
⚠	78	QMFZ047-150-T	FUSE	1		
	79	FSKS3017-002	LED HOLDER	1		

Cassette mechanism assembly and parts list

Block No. M P M M

CDS-801

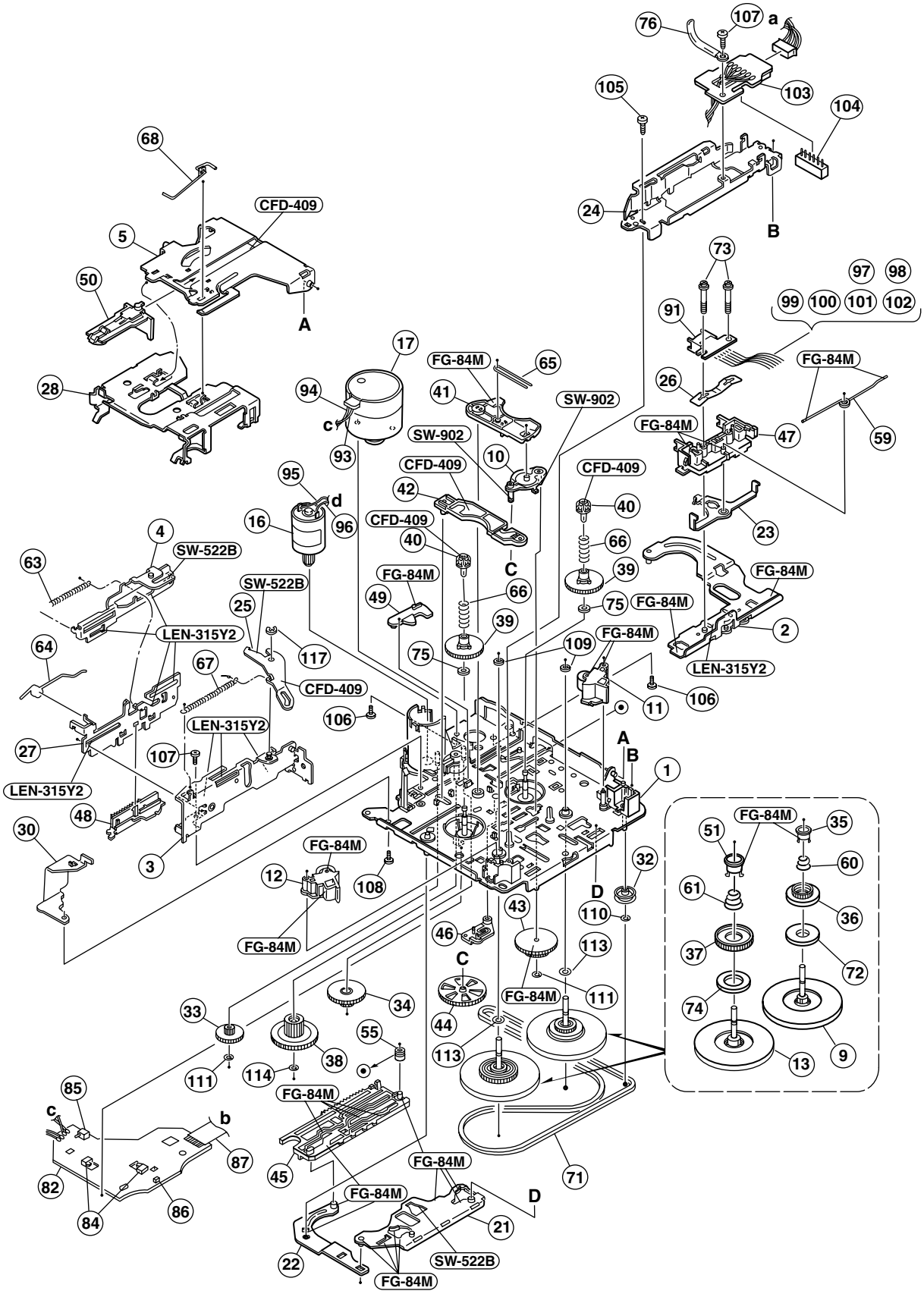

■ Parts list (Cassette mechanism)

Block No. MPMM

⚠	Item	Parts number	Parts name	Q'ty	Description	Area
	1	X-0801-1003S	MAIN CHASSIS AS	1		
	2	X-0801-1002S	SLIDE CHASSIS A	1		
	3	X-0801-1008S	SIDE BKT ASS'Y	1		
	4	X-0801-1010S	EJECT CAM LIMIT	1		
	5	X-0801-1013S	CASSETTE HANGER	1		
	9	1-0801-6002S	FLYWHEEL ASSY F	1		
	10	X-0801-2003S	GEAR BASE ASS'Y	1		
	11	X-0801-2021S	PINCH ARM F ASS	1		
	12	X-0801-2022S	PINCH ARM R ASS	1		
	13	1-0801-6003S	FLYWHEEL ASSY R	1		
	16	X-0801-7006S	SUB MOTOR ASS'Y	1		
	17	X-0801-7057S	MAIN MOTOR ASSY	1		
	21	1-0801-1003S	DIRECTION PLATE	1		
	22	1-0801-1004S	DIRECTION LINK	1		
	23	1-0801-1005S	PINCH SPG ARM	1		
	24	1-0801-1006S	CASSETTE GUIDE	1		
	25	1-0801-1007S	LOAD ARM	1		
	26	1-0801-1009S	HEAD SUPT SPG	1		
	27	1-0801-1011S	EJECT CAM PLATE	1		
	28	1-0801-1012S	CASSETTE HOLDER	1		
	30	1-0801-1020S	REINFORCE BRKT	1		
	32	1-0101-2056S	IDLE PULLEY(A1)	1		
	33	1-0801-2004S	REDUCTION GEARA	1		
	34	1-0801-2005S	REDUCTION GEARB	1		
	35	1-0801-2006S	SPG HOLDER F	1		
	36	1-0801-2007S	FRICTION GEARPL	1		
	37	1-0801-2008S	FRICTION GEARFF	1		
	38	1-0801-2009S	MODE GEAR	1		
	39	1-0801-2010S	REEL SPINDLE	2		
	40	1-0801-2011S	REEL DRIVER	2		
	41	1-0801-2014S	GEAR BASE ARM	1		
	42	1-0801-2015S	GEAR BASE LINK	1		
	43	1-0801-2016S	TAKE UP GEAR	1		
	44	1-0801-2017S	REFLECTOR GEAR	1		
	45	1-0801-2018S	MODE RACK	1		
	46	1-0801-2019S	MODE SW ACTUATR	1		
	47	1-0801-2020S	TAPE GUIDE	1		
	48	1-0801-2023S	LOAD RACK	1		
	49	1-0801-2024S	RACK LINK	1		
	50	1-0801-2025S	CASSETTE CATCH	1		
	51	1-0801-2030S	SPG HOLDER R	1		
	55	1-0801-3005S	RACK COLLAR	1		
	59	1-0801-4001S	PINCH ARM SPG	1		
	60	1-0801-4002S	TU SPG	1		
	61	1-0801-4003S	FF SPG	1		
	63	1-0801-4005S	EJECTCAM PLT SP	1		
	64	1-0801-4006S	HOLDER CUSH SPG	1		
	65	1-0801-4007S	GEAR BASE SPG	1		

■ Parts list (Cassette mechanism)

Block No. MPMM

⚠	Item	Parts number	Parts name	Q'ty	Description	Area
	66	1-0801-4008S	REEL DRIVER SPG	2		
	67	1-0801-4009S	LOAD ARM SPG	1		
	68	1-0801-4011S	HOLDER STAB SPG	1		
	71	1-0801-5001S	BELT	1		
	72	1-0801-5002S	FELT	1	7.5*18.5*1.0	
	73	1-0801-5003S	AZIMUTH SCR	2		
	74	1-0801-5004S	FELT	1	11*18.5*1.0	
	75	1-0801-5005S	REEL WASHER	2		
	76	21732-6280-36S	LUG PLATE	1		
	82	1-0801-7001S	REEL PCB DL	1		
	84	1-0801-7003S	SW(MATSUSHITA)	2	(ESE22MH2L)	
	85	1-0801-7005S	SW	1	(ALPS SPPB64)	
	86	1-0801-7024S	PHOTO SENSOR	1	(ON2170-QR FS)	
	87	1-0801-7026S	FLAT CABLE 10P	1		
	91	1-0801-7014S	HEAD	1	(MITSUMIP-5544)	
	93	10801-7009-0S	M.MOTOR WIRE	1	BLACK	
	94	10801-7009-1S	M.MOTOR WIRE	1	RED	
	95	10801-7010-0S	S.MOTOR WIRE	1	ORANGE	
	96	10801-7010-1S	S.MOTOR WIRE	1	BROWN	
	97	10801-7015-0S	HEAD WIRE BLACK	1		
	98	10801-7015-1S	HEAD WIRE BROWN	1		
	99	10801-7015-2S	HEAD WIRE RED	1		
	100	10801-7015-3S	HEAD WIRE ORANG	1		
	101	10801-7015-4S	HEAD WIRE YELLO	1		
	102	10801-7015-5S	HEAD WIRE WHITE	1		
	103	1-0801-7016S	HEAD PCB	1		
	104	1-0801-7025S	CONN S6B-PH-K-S	1		
	105	21382-3060-C2S	+PLAIN B-TYPE	1	M2.3*6.0	
	106	2-1032-0025-C2S	+SCREW PLAIN	2	M2*2.5	
	107	21332-0035-P1S	S-TYPE PRECISIO	2	M2*3.5	
	108	21112-6035-C2S	+SCREW PLAIN	1	M2.6*3.5	
	109	2-1816-0032-E8S	LMW-S	2	1.6*3.2*0.35	
	110	21812-0032-D2S	PSW-S	1	1.2*3.2*0.25	
	111	1-0036-5024S	PSW-S(REEL B)	2	1.5*3.2*0.25	
	113	2-1821-0040-D1S	PSW	2	2.1*4.0*0.25	
	114	21821-0040-D2S	PSW-S	1	2.1*4.0*0.25	
	117	2-1711-5040-16S	E-RING	1	1.5	

Grease point 1/2

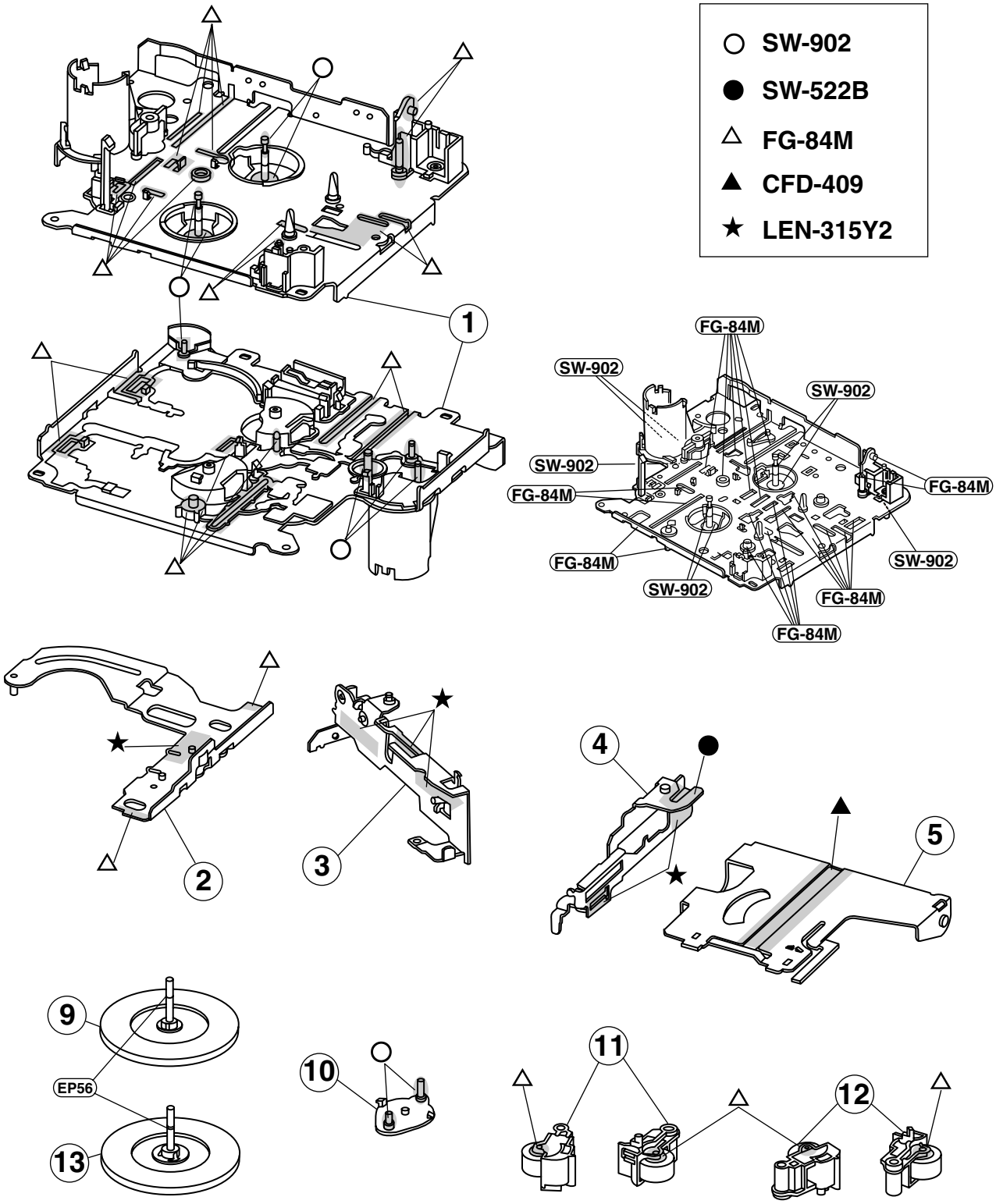

Grease point 2/2

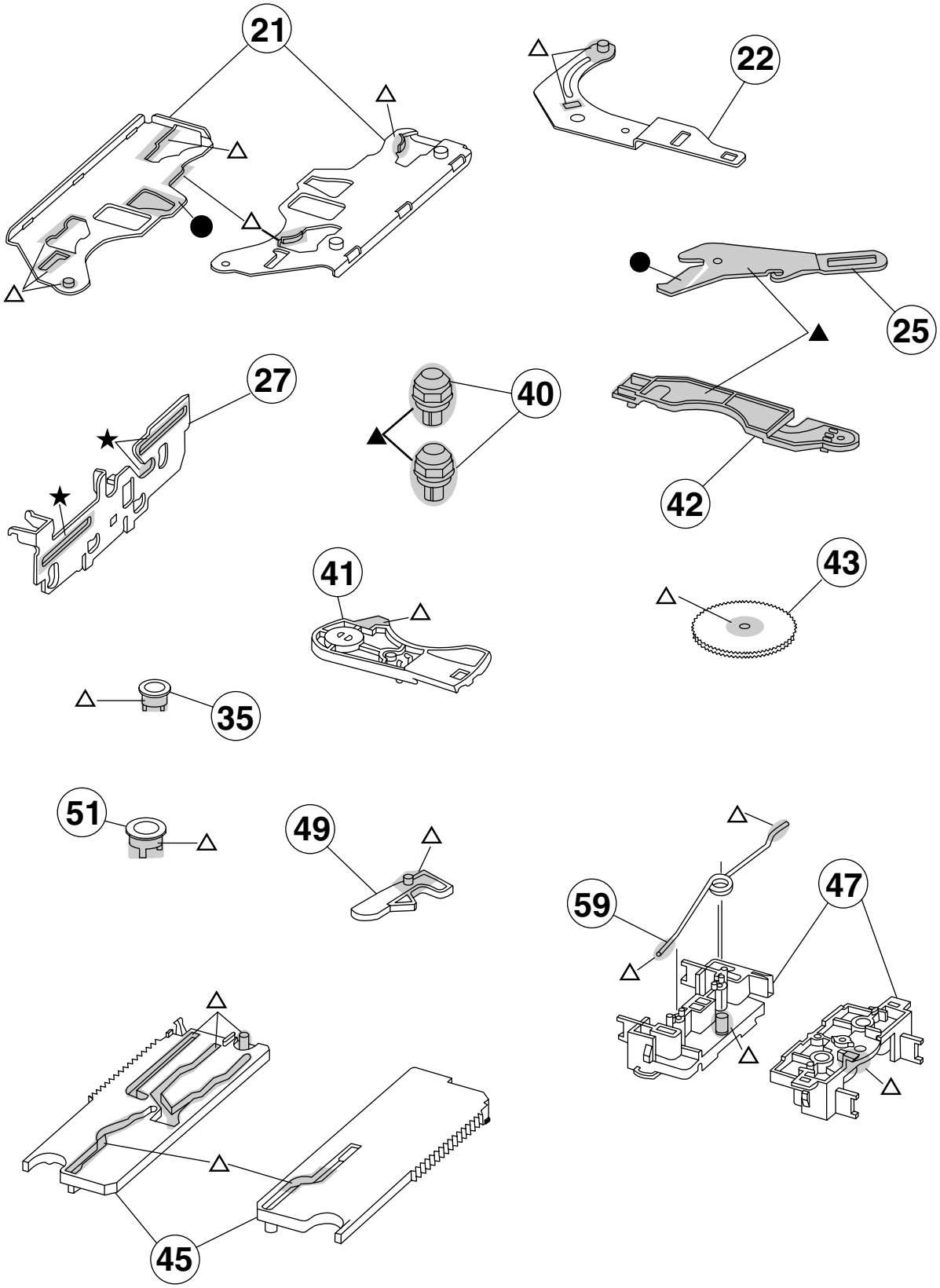

■ Electrical parts list (Main board)

Block No. 01

⚠	Item	Parts number	Parts name	Remarks	Area
	C 1	QERF1CM-107Z	E CAPACITOR	100MF 20% 16V	
	C 2	NDC31HJ-470X	C CAPACITOR		
	C 3	NCB31EK-473X	C CAPACITOR		
	C 4	NCB31EK-104X	C CAPACITOR		
	C 5	QERF1HM-105Z	E CAPACITOR	1.0MF 20% 50V	
	C 6	QERF1HM-105Z	E CAPACITOR	1.0MF 20% 50V	
	C 7	QERF1HM-104Z	E CAPACITOR	.10MF 20% 50V	
	C 8	NDC31HJ-470X	C CAPACITOR		
	C 9	QERF1AM-227Z	E CAPACITOR	220MF 20% 10V	
	C 10	NCB31HK-331X	C CAPACITOR		
	C 31	NCB31EK-123X	C CAPACITOR		
	C 32	NCB31EK-563X	C CAPACITOR		
	C 33	NDC21HJ-151X	C CAPACITOR		
	C 41	NCB31HK-102X	C CAPACITOR		
	C 42	QEQF1HM-225Z	NP E CAPACITOR	2.2MF 20% 50V	
	C 43	QERF1HM-474Z	E CAPACITOR	.47MF 20% 50V	
	C 51	NDC31HJ-331X	C CAPACITOR		
	C 52	NCB31EK-103X	C CAPACITOR		
	C 53	NCB31HK-472X	C CAPACITOR		
	C 54	NCB31EK-104X	C CAPACITOR		
	C 55	QERF1HM-474Z	E CAPACITOR	.47MF 20% 50V	
	C 71	NCB31EK-223X	C CAPACITOR		
	C 72	NCB31HK-561X	C CAPACITOR		
	C 73	QERF1HM-225Z	E CAPACITOR	2.2MF 20% 50V	
	C 74	NDC31HJ-820X	C CAPACITOR		
	C 75	NDC31HJ-470X	C CAPACITOR		
	C 76	NCB31HK-103X	C CAPACITOR		
	C 77	QERF1CM-476Z	E CAPACITOR	47MF 20% 16V	
	C 81	NCB31EK-183X	C CAPACITOR		
	C 82	NCB31HK-183X	C CAPACITOR		
	C 161	QERF1HM-225Z	E CAPACITOR	2.2MF 20% 50V	
	C 162	QERF1HM-105Z	E CAPACITOR	1.0MF 20% 50V	
	C 163	QERF1HM-105Z	E CAPACITOR	1.0MF 20% 50V	
	C 164	QERF1HM-105Z	E CAPACITOR	1.0MF 20% 50V	
	C 165	QERF1HM-105Z	E CAPACITOR	1.0MF 20% 50V	
	C 166	QERF1HM-225Z	E CAPACITOR	2.2MF 20% 50V	
	C 167	QERF1CM-476Z	E CAPACITOR	47MF 20% 16V	
	C 168	QERF1CM-107Z	E CAPACITOR	100MF 20% 16V	
	C 169	NCB31HK-822X	C CAPACITOR		
	C 170	NCB21CK-154X	C CAPACITOR		
	C 171	NCB21CK-224X	C CAPACITOR		
	C 172	NCB31HK-822X	C CAPACITOR		
	C 173	NCB21CK-154X	C CAPACITOR		
	C 174	NCB21CK-224X	C CAPACITOR		
	C 175	NCB31EK-333X	C CAPACITOR		
	C 176	NCB31EK-333X	C CAPACITOR		
	C 177	NCB31HK-562X	C CAPACITOR		
	C 178	NCB31HK-562X	C CAPACITOR		
	C 180	QERF1CM-107Z	E CAPACITOR	100MF 20% 16V	
	C 181	QERF1EM-475Z	E CAPACITOR	4.7MF 20% 25V	
	C 182	QERF1EM-475Z	E CAPACITOR	4.7MF 20% 25V	
	C 183	QERF1EM-475Z	E CAPACITOR	4.7MF 20% 25V	
	C 184	QERF1EM-475Z	E CAPACITOR	4.7MF 20% 25V	
	C 241	QERF1HM-105Z	E CAPACITOR	1.0MF 20% 50V	
	C 242	QERF1CM-226Z	E CAPACITOR	22MF 20% 16V	
	C 243	NCB31EK-473X	C CAPACITOR		
	C 244	NCB21HK-153X	C CAPACITOR		
	C 301	QERF1EM-475Z	E CAPACITOR	4.7MF 20% 25V	
	C 302	QERF1CM-476Z	E CAPACITOR	47MF 20% 16V	
	C 303	NCS31HJ-391X	C CAPACITOR		
	C 304	NCS31HJ-391X	C CAPACITOR		
	C 305	NCB31EK-104X	C CAPACITOR		
	C 306	NCB31EK-104X	C CAPACITOR		

⚠	Item	Parts number	Parts name	Remarks	Area
	C 307	QERF1EM-475Z	E CAPACITOR	4.7MF 20% 25V	
	C 308	QERF1HM-225Z	E CAPACITOR	2.2MF 20% 50V	
	C 309	QERF1HM-225Z	E CAPACITOR	2.2MF 20% 50V	
	C 313	NCS31HJ-391X	C CAPACITOR		
	C 314	NCS31HJ-391X	C CAPACITOR		
	C 318	QERF1HM-225Z	E CAPACITOR	2.2MF 20% 50V	
	C 319	QERF1HM-225Z	E CAPACITOR	2.2MF 20% 50V	
	C 323	NCB31EK-104X	C CAPACITOR		
	C 324	NCB31EK-104X	C CAPACITOR		
	C 325	NCB31EK-104X	C CAPACITOR		
	C 326	NCB31EK-104X	C CAPACITOR		
	C 327	QERF1CM-226Z	E CAPACITOR	22MF 20% 16V	
	C 701	NCB31HK-102X	C CAPACITOR		
	C 702	NCB31EK-104X	C CAPACITOR		
	C 703	QERF1AM-227Z	E CAPACITOR	220MF 20% 10V	
	C 704	QERF0JM-107Z	E CAPACITOR	100MF 20% 6.3V	
	C 705	NCB31EK-104X	C CAPACITOR		
	C 706	NDC21HJ-270X	C CAPACITOR		
	C 707	NDC21HJ-270X	C CAPACITOR		
	C 708	NCB31EK-104X	C CAPACITOR		
	C 709	NCB31EK-104X	C CAPACITOR		
	C 713	NCB31EK-473X	C CAPACITOR		
	C 781	QERF1CM-107Z	E CAPACITOR	100MF 20% 16V	
	C 782	QERF1AM-227Z	E CAPACITOR	220MF 20% 10V	
	C 801	NCB31EK-473X	C CAPACITOR		
	C 891	NCB31EK-104X	C CAPACITOR		
	C 901	QERF1CM-106Z	E CAPACITOR	10MF 20% 16V	
	C 902	NCB31EK-473X	C CAPACITOR		
	C 903	QETB1CM-228	E CAPACITOR	2200MF 20% 16V	
	C 904	NCB31EK-473X	C CAPACITOR		
	C 905	QERF1HM-104Z	E CAPACITOR	.10MF 20% 50V	
	C 906	QERF1CM-107Z	E CAPACITOR	100MF 20% 16V	
	C 907	QERF1HM-105Z	E CAPACITOR	1.0MF 20% 50V	
	C 908	QERF1AM-227Z	E CAPACITOR	220MF 20% 10V	
	C 909	QETN0JM-228Z	E CAPACITOR	2200MF 20% 6.3V	
	C 911	NCS31HJ-151X	C CAPACITOR		
	C 981	NCB31EK-104X	C CAPACITOR		
	C 982	QERF1CM-106Z	E CAPACITOR	10MF 20% 16V	
	CJ601	QNZ0007-002	CAR CONNECTOR		
	CP401	QGB1214J1-18S	CONNECTOR		
	CP901	QNZ0112-001	CAR CONNECTOR		
	D 2	1SS355-X	DIODE		
	D 3	1SS355-X	DIODE		
	D 4	1SS355-X	DIODE		
	D 5	1SS133-T2	SI DIODE		
	D 6	1SS133-T2	SI DIODE		
	D 7	1SS355-X	DIODE		
	D 161	1SS355-X	DIODE		
	D 162	1SS355-X	DIODE		
	D 241	1SS355-X	DIODE		
	D 242	1SS355-X	DIODE		
	D 323	1SS355-X	DIODE		
	D 333	1SS355-X	DIODE		
	D 343	1SS355-X	DIODE		
	D 353	1SS355-X	DIODE		
	D 701	MTZJ5.6B-T2	ZENER DIODE		
	D 702	MTZJ5.6B-T2	ZENER DIODE		
	D 703	MTZJ5.6B-T2	ZENER DIODE		
	D 704	MTZJ5.6B-T2	ZENER DIODE		
	D 705	MTZJ5.6B-T2	ZENER DIODE		
	D 706	MTZJ5.6B-T2	ZENER DIODE		
	D 707	MTZJ5.6B-T2	ZENER DIODE		
	D 708	MTZJ5.6B-T2	ZENER DIODE		

■ **Electrical parts list (Main board)** **Block No. 01**

⚠	Item	Parts number	Parts name	Remarks	Area
	D 709	MTZJ5.6B-T2	ZENER DIODE		
	D 711	MTZJ5.6B-T2	ZENER DIODE		
	D 712	SLR-56MC3F	L.E.D.		
	D 781	MTZJ11C-T2	Z.DIODE		
	D 782	1SS355-X	DIODE		
	D 783	1SS355-X	DIODE		
	D 891	1SS355-X	DIODE		
	D 892	1SS355-X	DIODE		
	D 901	1N5401-TU-15	DIODE		
	D 902	1SS355-X	DIODE		
	D 903	1SS355-X	DIODE		
	D 981	CRS03-W	SB DIODE		
	D 982	CRS03-W	SB DIODE		
	IC 71	SAA6579T-X	IC		
	IC161	TEA6320T-X	IC		
	IC301	LA4743K	IC		
	IC701	UPD178018AGC603	IC		
	IC801	HD74HC126FP-X	IC		
	IC901	HA13164A	IC		
	J 1	QNB0100-002	ANT TERMINAL		
	J 321	QNN0175-001	PIN JACK		
	J 801	QNZ0095-001	CONNECTOR		
	L 1	QQL231K-4R7Y	INDUCTOR		
	L 901	QQR0703-001	CHOKE COIL		
	L 902	QQL231K-470Y	INDUCTOR		
	L 903	QQL231K-470Y	INDUCTOR		
	Q 1	DTC114EKA-X	TRANSISTOR		
	Q 2	2SA1037AK/RS/-X	TRANSISTOR		
	Q 3	2SA1037AK/RS/-X	TRANSISTOR		
	Q 4	DTA114EKA-X	D.TRANSISTOR		
	Q 5	DTA114EKA-X	D.TRANSISTOR		
	Q 6	2SC2412K/R/-X	TRANSISTOR		
	Q 7	2SC2412K/R/-X	TRANSISTOR		
	Q 8	2SC2412K/R/-X	TRANSISTOR		
	Q 9	DTC114EKA-X	TRANSISTOR		
	Q 10	DTA114EKA-X	D.TRANSISTOR		
	Q 31	2SC3661-X	TRANSISTOR		
	Q 32	2SC3661-X	TRANSISTOR		
	Q 41	2SC2412K/R/-X	TRANSISTOR		
	Q 42	2SC2412K/R/-X	TRANSISTOR		
	Q 51	2SC2412K/R/-X	TRANSISTOR		
	Q 52	2SC2412K/R/-X	TRANSISTOR		
	Q 53	DTC114EKA-X	TRANSISTOR		
	Q 241	2SD601A/R/-X	TRANSISTOR		
	Q 321	2SD1048/6-7/-X	TRANSISTOR		
	Q 331	2SD1048/6-7/-X	TRANSISTOR		
	Q 341	2SD1048/6-7/-X	TRANSISTOR		
	Q 351	2SD1048/6-7/-X	TRANSISTOR		
	Q 701	2SC2412K/R/-X	TRANSISTOR		
	Q 781	DTA114EKA-X	D.TRANSISTOR		
	Q 782	DTA114EKA-X	D.TRANSISTOR		
	Q 784	DTC114EKA-X	TRANSISTOR		
	Q 891	UN2211-X	TRANSISTOR		
	Q 901	DTC114EKA-X	TRANSISTOR		
	Q 902	2SA1706/ST/-T	TRANSISTOR		
	Q 976	UN2211-X	TRANSISTOR		
	Q 977	2SA1037AK/RS/-X	TRANSISTOR		
	R 1	NRS181J-330X	MG RESISTOR		
	R 2	NRSA63J-472X	MG RESISTOR		
	R 3	NRSA63J-473X	MG RESISTOR		
	R 4	NRSA63J-332X	MG RESISTOR		
	R 5	NRSA63J-473X	MG RESISTOR		
	R 6	NRS181J-8R2X	MG RESISTOR		

⚠	Item	Parts number	Parts name	Remarks	Area
	R 8	NRSA63J-472X	MG RESISTOR		
	R 9	NRSA63J-472X	MG RESISTOR		
	R 10	NRSA63J-472X	MG RESISTOR		
	R 11	NRS181J-223X	MG RESISTOR		
	R 12	NRSA63J-0R0X	MG RESISTOR		
	R 31	NRSA63J-102X	MG RESISTOR		
	R 32	NRSA63J-392X	MG RESISTOR		
	R 33	NRSA63J-102X	MG RESISTOR		
	R 34	NRSA63J-102X	MG RESISTOR		
	R 41	NRSA63J-152X	MG RESISTOR		
	R 42	NRSA63J-102X	MG RESISTOR		
	R 43	NRSA63J-103X	MG RESISTOR		
	R 44	NRS181J-102X	MG RESISTOR		
	R 53	NRSA63J-473X	MG RESISTOR		
	R 54	NRSA63J-473X	MG RESISTOR		
	R 55	NRSA63J-103X	MG RESISTOR		
	R 56	NRSA63J-222X	MG RESISTOR		
	R 57	NRSA63J-103X	MG RESISTOR		
	R 58	NRSA63J-153X	MG RESISTOR		
	R 59	NRSA63J-471X	MG RESISTOR		
	R 60	NRSA63J-473X	MG RESISTOR		
	R 71	NRSA63J-222X	MG RESISTOR		
	R 72	NRSA02J-222X	MG RESISTOR		
	R 73	NRSA02J-222X	MG RESISTOR		
	R 81	NRSA63J-103X	MG RESISTOR		
	R 82	NRSA63J-103X	MG RESISTOR		
	R 83	NRSA63J-223X	MG RESISTOR		
	R 84	NRSA63J-223X	MG RESISTOR		
	R 161	NRSA63J-0R0X	MG RESISTOR		
	R 162	NRSA63J-0R0X	MG RESISTOR		
	R 165	NRSA63J-223X	MG RESISTOR		
	R 166	NRSA63J-222X	MG RESISTOR		
	R 167	NRSA63J-223X	MG RESISTOR		
	R 168	NRSA63J-222X	MG RESISTOR		
	R 169	NRSA63J-224X	MG RESISTOR		
	R 170	NRSA63J-224X	MG RESISTOR		
	R 171	NRS181J-100X	MG RESISTOR		
	R 172	NRSA63J-271X	MG RESISTOR		
	R 173	NRSA63J-271X	MG RESISTOR		
	R 241	NRSA63J-473X	MG RESISTOR		
	R 242	NRSA63J-184X	MG RESISTOR		
	R 243	NRSA63J-123X	MG RESISTOR		
	R 244	NRSA63J-223X	MG RESISTOR		
	R 245	NRSA02J-101X	MG RESISTOR		
	R 246	NRSA02J-102X	MG RESISTOR		
	R 247	NRSA63J-224X	MG RESISTOR		
	R 301	NRSA63J-273X	MG RESISTOR		
	R 302	NRSA63J-273X	MG RESISTOR		
	R 305	NRSA63J-102X	MG RESISTOR		
	R 306	NRSA63J-473X	MG RESISTOR		
	R 307	NRSA63J-473X	MG RESISTOR		
	R 308	NRSA63J-473X	MG RESISTOR		
	R 309	NRSA63J-473X	MG RESISTOR		
	R 311	NRSA63J-273X	MG RESISTOR		
	R 312	NRSA63J-273X	MG RESISTOR		
	R 321	NRS181J-101X	MG RESISTOR		
	R 322	NRSA63J-102X	MG RESISTOR		
	R 323	NRS181J-222X	MG RESISTOR		
	R 331	NRSA63J-101X	MG RESISTOR		
	R 332	NRSA63J-102X	MG RESISTOR		
	R 333	NRS181J-222X	MG RESISTOR		
	R 341	NRSA63J-101X	MG RESISTOR		
	R 342	NRSA63J-102X	MG RESISTOR		

■ Electrical parts list (Main board)

Block No. 01

⚠	Item	Parts number	Parts name	Remarks	Area
	R 343	NRSA63J-222X	MG RESISTOR		
	R 351	NRS181J-101X	MG RESISTOR		
	R 352	NRSA63J-102X	MG RESISTOR		
	R 353	NRSA63J-222X	MG RESISTOR		
	R 701	NRSA63J-0R0X	MG RESISTOR		
	R 702	NRSA63J-0R0X	MG RESISTOR		
	R 703	NRSA63J-0R0X	MG RESISTOR		
	R 704	NRSA63J-103X	MG RESISTOR		
	R 705	NRSA63J-103X	MG RESISTOR		
	R 706	NRSA63J-103X	MG RESISTOR		
	R 707	NRSA63J-472X	MG RESISTOR		
	R 708	NRSA63J-472X	MG RESISTOR		
	R 711	NRSA63J-473X	MG RESISTOR		
	R 712	NRSA63J-473X	MG RESISTOR		
	R 713	NRSA63J-103X	MG RESISTOR		
	R 714	NRSA63J-472X	MG RESISTOR		
	R 715	NRSA63J-472X	MG RESISTOR		
	R 716	NRSA63J-472X	MG RESISTOR		
	R 717	NRSA63J-472X	MG RESISTOR		
	R 718	NRSA63J-103X	MG RESISTOR		
	R 719	NRSA63J-103X	MG RESISTOR		
	R 720	NRSA63J-103X	MG RESISTOR		
	R 721	NRS181J-103X	MG RESISTOR		
	R 722	NRSA63J-103X	MG RESISTOR		
	R 723	NRSA63J-472X	MG RESISTOR		
	R 724	NRSA63J-472X	MG RESISTOR		
	R 725	NRSA63J-472X	MG RESISTOR		
	R 726	NRSA63J-472X	MG RESISTOR		
	R 727	NRSA63J-472X	MG RESISTOR		
	R 728	NRSA63J-472X	MG RESISTOR		
	R 729	NRSA63J-473X	MG RESISTOR		
	R 730	NRSA63J-391X	MG RESISTOR		
	R 731	NRSA63J-103X	MG RESISTOR		
	R 732	NRSA63J-473X	MG RESISTOR		
	R 733	NRSA63J-473X	MG RESISTOR		
	R 735	NRSA63J-473X	MG RESISTOR		
	R 738	NRSA63J-473X	MG RESISTOR		
	R 739	NRSA63J-104X	MG RESISTOR		
	R 740	NRSA63J-473X	MG RESISTOR		
	R 742	NRSA63J-563X	MG RESISTOR		
	R 743	NRSA63J-473X	MG RESISTOR		
	R 745	NRSA63J-473X	MG RESISTOR		
	R 747	NRSA63J-473X	MG RESISTOR		
	R 748	NRSA63J-243X	MG RESISTOR		
	R 749	NRSA63J-101X	MG RESISTOR		
	R 752	NRS181J-511X	MG RESISTOR		
	R 781	NRSA63J-472X	MG RESISTOR		
	R 782	NRSA63J-473X	MG RESISTOR		
	R 801	NRSA63J-104X	MG RESISTOR		
	R 802	NRSA63J-334X	MG RESISTOR		
	R 803	NRSA63J-101X	MG RESISTOR		
	R 804	NRSA63J-223X	MG RESISTOR		
	R 805	NRSA63J-104X	MG RESISTOR		
	R 806	NRSA63J-103X	MG RESISTOR		
	R 807	NRSA63J-104X	MG RESISTOR		
	R 808	NRSA63J-104X	MG RESISTOR		
	R 809	NRSA63J-101X	MG RESISTOR		
	R 810	NRSA63J-334X	MG RESISTOR		
	R 891	NRSA02J-473X	MG RESISTOR		
	R 892	NRSA02J-102X	MG RESISTOR		
	R 901	QRE141J-470Y	C RESISTOR	47 5% 1/4W	
	R 902	NRS181J-103X	MG RESISTOR		
	R 903	NRS181J-472X	MG RESISTOR		
	R 904	NRS181J-183X	MG RESISTOR		
	R 905	NRS181J-103X	MG RESISTOR		
	R 906	NRS181J-102X	MG RESISTOR		
	R 907	NRS181J-473X	MG RESISTOR		
	R 976	NRSA63J-104X	MG RESISTOR		
	R 977	NRSA63J-273X	MG RESISTOR		
	R 978	NRS181J-123X	MG RESISTOR		
	S 701	QSW0451-001	DETECT SWITCH		
	S 702	QSW0451-001	DETECT SWITCH		
	S 703	QSQ1A11-V06Z	TACT SWITCH		
	TU 1	QAU0222-001	TUNER		
	X 71	QAX0263-001Z	CRYSTAL		
	X 701	QAX0406-002Z	CRYSTAL		

■ **Electrical parts list (Mecha control board)** **Block No. 02**

⚠	Item	Parts number	Parts name	Remarks	Area
	C 401	NDC31HJ-101X	C CAPACITOR		
	C 402	NDC31HJ-101X	C CAPACITOR		
	C 403	NDC31HJ-101X	C CAPACITOR		
	C 404	NDC31HJ-101X	C CAPACITOR		
	C 405	NDC31HJ-101X	C CAPACITOR		
	C 406	NDC31HJ-101X	C CAPACITOR		
	C 407	NDC31HJ-101X	C CAPACITOR		
	C 408	NDC31HJ-101X	C CAPACITOR		
	C 409	QEKJ1CM-226Z	E CAPACITOR	22MF 20% 16V	
	C 410	QFV61HJ-153Z	MF CAPACITOR	.015MF 5% 50V	
	C 411	QFV61HJ-153Z	MF CAPACITOR	.015MF 5% 50V	
	C 412	NCB31EK-104X	C CAPACITOR		
	C 413	NCB31EK-104X	C CAPACITOR		
	C 414	QEKJ1CM-226Z	E CAPACITOR	22MF 20% 16V	
	C 415	NCB31EK-103X	C CAPACITOR		
	C 416	QFV61HJ-104Z	MF CAPACITOR	.10MF 5% 50V	
	C 417	QFV61HJ-104Z	MF CAPACITOR	.10MF 5% 50V	
	C 418	NDC31HJ-221X	C CAPACITOR		
	C 419	QEKJ1HM-474Z	E CAPACITOR	.47MF 20% 50V	
	C 421	NCB31HK-103X	C CAPACITOR		
	C 422	NCB31EK-104X	C CAPACITOR		
	C 423	QERF1CM-106Z	E CAPACITOR	10MF 20% 16V	
	C 424	NCB31EK-104X	C CAPACITOR		
	C 425	NCB31HK-103X	C CAPACITOR		
	CN401	QGB1214K1-18S	CONNECTOR		
	CN402	VMP3501-001	WIRE		
	CN403	QGF1219F1-10S	CONN.TERMINAL		
	D 401	MA3047/H/-X	ZENER DIODE		
	D 402	DSK10C-T1	DIODE		
	IC401	CXA2560Q	IC		
	IC402	LB1641	IC		
	Q 402	DTC114EKA-X	TRANSISTOR		
	Q 403	2SB1322/RS/-T	TRANSISTOR		
	R 401	NRS181J-391X	MG RESISTOR		
	R 402	NRSA63J-104X	MG RESISTOR		
	R 403	NRSA63J-104X	MG RESISTOR		
	R 404	NRSA63J-104X	MG RESISTOR		
	R 405	NRSA63J-104X	MG RESISTOR		
	R 406	NRSA63J-181X	MG RESISTOR		
	R 407	NRSA63J-181X	MG RESISTOR		
	R 412	NRSA02J-101X	MG RESISTOR		
	R 413	NRSA63J-183X	MG RESISTOR		
	R 414	NRSA63J-392X	MG RESISTOR		
	R 415	NRSA63J-223X	MG RESISTOR		
	R 416	NRSA63J-914X	MG RESISTOR		
	R 417	NRSA63J-103X	MG RESISTOR		
	R 418	NRSA63J-153X	MG RESISTOR		
	R 422	NRSA02J-332X	MG RESISTOR		
	R 423	NRS181J-473X	MG RESISTOR		
	R 424	NRSA02J-332X	MG RESISTOR		
	R 425	NRS181J-330X	MG RESISTOR		
	R 426	QUY150-050Y	BUS WIRE		
	VR401	QVP0009-333Z	SEMI V RESISTOR	DOLBY	
	VR402	QVP0009-333Z	SEMI V RESISTOR	DOLBY	

■ **Electrical parts list (Front board)** **Block No. 03**

⚠	Item	Parts number	Parts name	Remarks	Area
	C 601	NBE20JM-475X	TS E CAPACITOR		
	C 602	NCB31HK-103X	C CAPACITOR		
	C 603	NCS31HJ-221X	C CAPACITOR		
	C 604	NCB31AK-224X	C CAPACITOR		
	C 605	NCB31AK-224X	C CAPACITOR		
	C 606	NBE20JM-475X	TS E CAPACITOR		
	CN601	QNZ0006-001	CAR CONNECTOR		
	D 601	SML-310LT/MN/-X	LED		
	D 602	SML-310VT/JK/-X	LED		
	D 603	SML-310VT/JK/-X	LED		
	D 604	SML-310VT/JK/-X	LED		
	D 605	SML-310VT/JK/-X	LED		
	D 606	SML-310VT/JK/-X	LED		
	D 607	SML-310VT/JK/-X	LED		
	D 608	SML-310VT/JK/-X	LED		
	D 609	SML-310VT/JK/-X	LED		
	D 610	SML-310VT/JK/-X	LED		
	D 611	SML-310VT/JK/-X	LED		
	D 612	SML-310VT/JK/-X	LED		
	D 613	SML-310VT/JK/-X	LED		
	D 614	SML-310VT/JK/-X	LED		
	D 615	SML-310VT/JK/-X	LED		
	D 616	SML-310VT/JK/-X	LED		
	D 617	SML-310VT/JK/-X	LED		
	D 618	SML-310VT/JK/-X	LED		
	D 619	SML-310VT/JK/-X	LED		
	D 620	SML-310VT/JK/-X	LED		
	D 621	LNJ308G81/1-3/X	LED		
	D 622	SML-310VT/JK/-X	LED		
	D 623	SML-310VT/JK/-X	LED		
	D 628	SML-310VT/JK/-X	LED		
	D 629	SML-310VT/JK/-X	LED		
	D 641	NSPW310BS/BRS/	LED		
	D 642	NSPW310BS/BRS/	LED		
	D 643	NSPW310BS/BRS/	LED		
	D 651	UDZS5.1B-X	Z DIODE		
	D 652	1SS355-X	DIODE		
	D 653	1SS355-X	DIODE		
	D 654	1SS355-X	DIODE		
	D 655	1SS355-X	DIODE		
	D 656	1SS355-X	DIODE		
	D 657	UDZS5.6B-X	Z DIODE		
	D 658	1SS355-X	DIODE		
	D 659	1SS355-X	DIODE		
	EN601	QSW0863-001	JOG SHUTTLE SW		
	IC601	LC75873NW	IC		
	IC602	RPM6938-SV4	IC		
	R 601	NRSA63J-821X	MG RESISTOR		
	R 602	NRSA63J-821X	MG RESISTOR		
	R 603	NRSA63J-122X	MG RESISTOR		
	R 604	NRSA63J-182X	MG RESISTOR		
	R 605	NRSA63J-272X	MG RESISTOR		
	R 606	NRSA63J-821X	MG RESISTOR		
	R 607	NRSA63J-821X	MG RESISTOR		
	R 608	NRSA63J-122X	MG RESISTOR		
	R 609	NRSA63J-182X	MG RESISTOR		
	R 611	NRSA63J-272X	MG RESISTOR		
	R 612	NRSA63J-821X	MG RESISTOR		
	R 613	NRSA63J-821X	MG RESISTOR		
	R 614	NRSA63J-122X	MG RESISTOR		
	R 615	NRSA63J-182X	MG RESISTOR		
	R 616	NRSA63J-272X	MG RESISTOR		
	R 617	NRSA63J-392X	MG RESISTOR		

⚠	Item	Parts number	Parts name	Remarks	Area
	R 620	NRS181J-471X	MG RESISTOR		
	R 621	NRS181J-271X	MG RESISTOR		
	R 622	NRS181J-271X	MG RESISTOR		
	R 623	NRS181J-271X	MG RESISTOR		
	R 624	NRS181J-391X	MG RESISTOR		
	R 625	NRS181J-431X	MG RESISTOR		
	R 626	NRS181J-271X	MG RESISTOR		
	R 627	NRS181J-391X	MG RESISTOR		
	R 628	NRS181J-561X	MG RESISTOR		
	R 629	NRS181J-511X	MG RESISTOR		
	R 630	NRS181J-511X	MG RESISTOR		
	R 641	NRS181J-102X	MG RESISTOR		
	R 642	NRS181J-102X	MG RESISTOR		
	R 643	NRS181J-102X	MG RESISTOR		
	R 644	NRS181J-0R0X	MG RESISTOR		
	R 650	NRSA02J-101X	MG RESISTOR		
	R 651	NRSA63J-473X	MG RESISTOR		
	R 652	NRSA63J-473X	MG RESISTOR		
	R 653	NRS181J-102X	MG RESISTOR		
	R 654	NRSA02J-221X	MG RESISTOR		
	R 655	NRSA02J-394X	MG RESISTOR		
	R 656	NRSA63J-334X	MG RESISTOR		
	R 657	NRSA63J-103X	MG RESISTOR		
	R 658	NRSA63J-470X	MG RESISTOR		
	R 661	NRSA63J-332X	MG RESISTOR		
	R 662	NRSA63J-332X	MG RESISTOR		
	R 663	NRSA63J-332X	MG RESISTOR		
	R 669	NRSA63J-103X	MG RESISTOR		
	R 670	NRSA63J-103X	MG RESISTOR		
	R 671	NRSA63J-103X	MG RESISTOR		
	S 601	NSW0124-001X	TACT SWITCH		
	S 602	NSW0124-001X	TACT SWITCH		
	S 603	NSW0124-001X	TACT SWITCH		
	S 604	NSW0124-001X	TACT SWITCH		
	S 605	NSW0124-001X	TACT SWITCH		
	S 606	NSW0124-001X	TACT SWITCH		
	S 607	NSW0124-001X	TACT SWITCH		
	S 608	NSW0124-001X	TACT SWITCH		
	S 609	NSW0124-001X	TACT SWITCH		
	S 610	NSW0124-001X	TACT SWITCH		
	S 611	NSW0124-001X	TACT SWITCH		
	S 613	NSW0124-001X	TACT SWITCH		
	S 614	NSW0124-001X	TACT SWITCH		
	S 615	NSW0124-001X	TACT SWITCH		
	S 616	NSW0124-001X	TACT SWITCH		
	S 617	NSW0124-001X	TACT SWITCH		
	S 618	NSW0124-001X	TACT SWITCH		
	S 619	NSW0124-001X	TACT SWITCH		
	S 620	NSW0124-001X	TACT SWITCH		

< MEMO >

Packing materials and accessories parts list

Block No. M 3 M M

Block No. M 5 M M

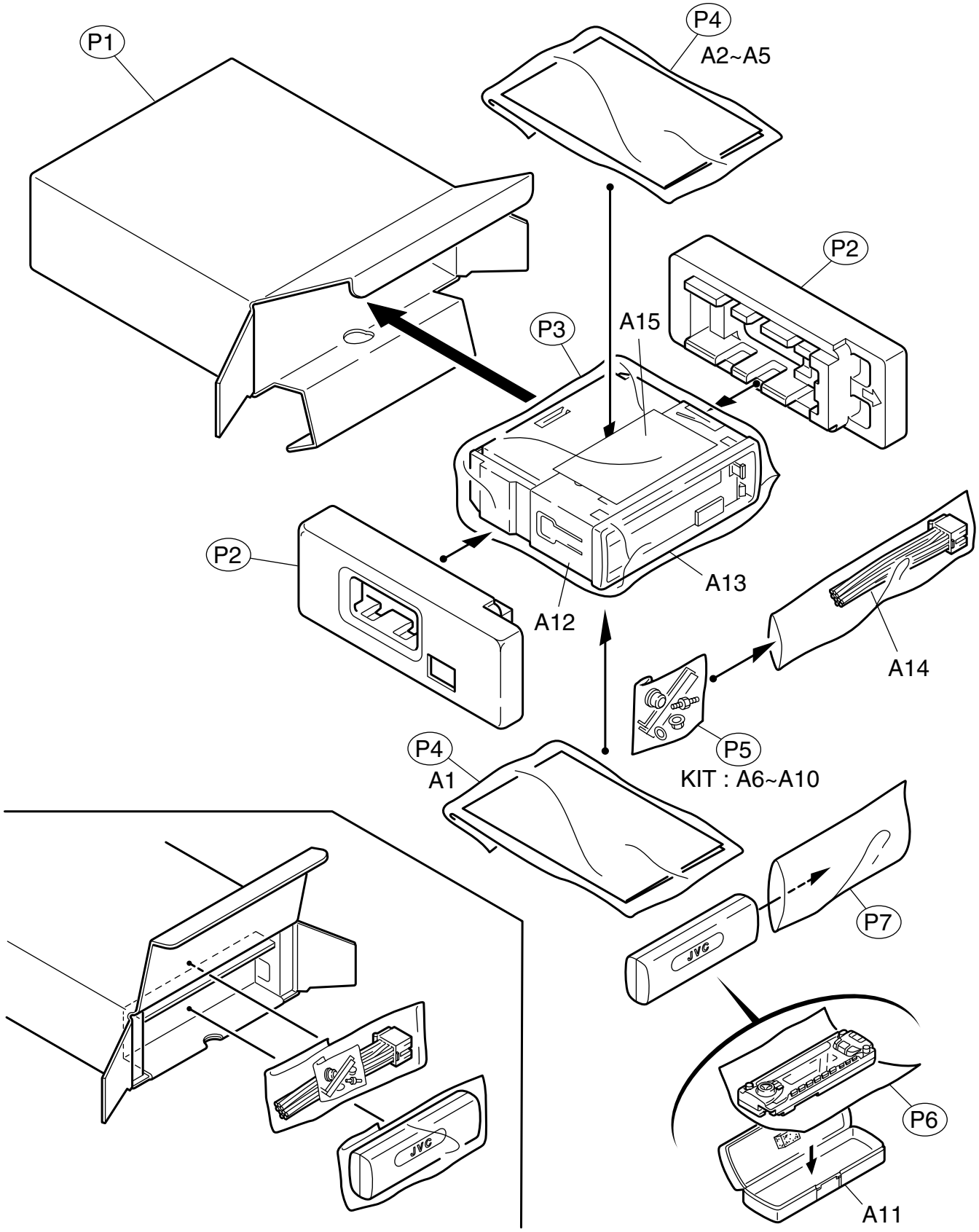

■ Parts list (Packing)

Block No. M3MM

⚠	Item	Parts number	Parts name	Q'ty	Description	Area
	P 1	GE30407-041A	PACKING CASE	1		
	P 2	GE10036-001A	ESP CUSHION	2		
	P 3	QPC03004315P	POLY BAG	1	FOR SET	
	P 4	FSPG4002-001	POLY BAG	2	FOR INST BOOK	
	P 5	QPA00801205	POLY BAG	1	FOR SCREW	
	P 6	FSYH4036-068	SHEET	1		
	P 7	QPA01003003	POLY BAG	1	FOR HARD CASE	

■ Parts list (Accessories)

Block No. M5MM

⚠	Item	Parts number	Parts name	Q'ty	Description	Area
	A 1	GET0083-001A	INST BOOK	1	ENG,GER,FRE,DUT	
	A 2	GET0083-002A	INST BOOK	1	SPA,ITA,SWE,RUS	
	A 3	GET0083-003A	INSTALL MANUAL	1	ENG,GER,FRE,DUT	
	A 4	GET0083-004A	INSTALL MANUAL	1	SPA,ITA,SWE,RUS	
	A 5	BT-54013-2	W.CARD	1		
	A 6	VKZ4027-202	PLUG NUT	1		
	A 7	VKH4871-001SS	MOUNT BOLT	1		
	A 8	VKZ4328-001	LOCK NUT	1		
	A 9	WNS5000Z	WASHER	1		
	A 10	FSKL4010-002	HOOK	2		
	A 11	FSJB3001-30C	HARD CASE	1		
	A 12	FSKM2004-202	MOUNTING SLEEVE	1		
	A 13	FSJD2034-001	TRIM PLATE	1		
	A 14	QAM0175-001	POWER CORD	1		
	A 15	LV40978-001A	CAUTION SHEET	1		
	KIT	KDGS717K-SCREW1	SCREW PARTS KIT	1	A6~A10	